Linear Motion Ltd — formerly Industrial Automation Services or IAS
3/103 Lansford Crescent, Avondale, Auckland 0600
PO Box 78270, Grey Lynn, Auckland, New Zealand
Phone: 0064 9 828 6604—Fax: 0064 9 828 6736
www.linearmotion.co.nz—info@linearmotion.co.nz

Linear Products

Commonly stocked in NZ











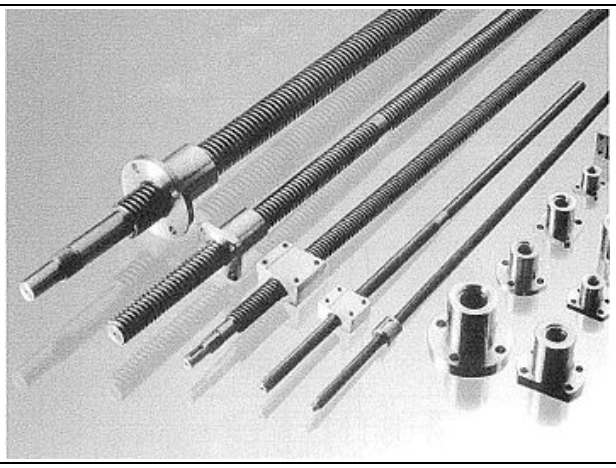



Round Shaft Series

Samick linear bushes are available in metric or imperial dimensions and regular or high load superball. Flanged and open types are also available along with shaft supports and housings. Shafting in hardened, chrome and SUS440 Stainless Steel is also stocked and cut to length.

Simplicity bushes are high performance plain bushes that will not catastrophically fail. Frelon bearing materials provides low wear, low friction, high strength, fast travel speeds and self-lubrication.

LM Profile Rail Guide System

Profile rail with recirculating ball race ways is a linear solution with high load and rigidity characteristics. Widely used linear solution for machine tools, production lines and motion equipment.

Available in rail sizes 9mm to 65mm with a wide variety of block designs. Raydent corrosion resistance offers excellent corrosion protection at a fraction of the cost of stainless steel.

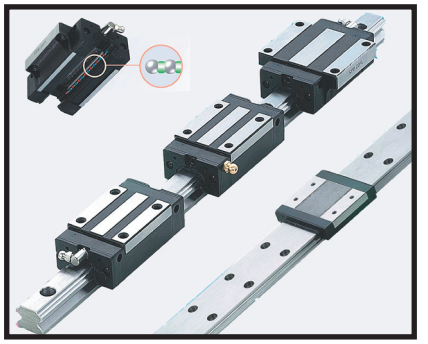

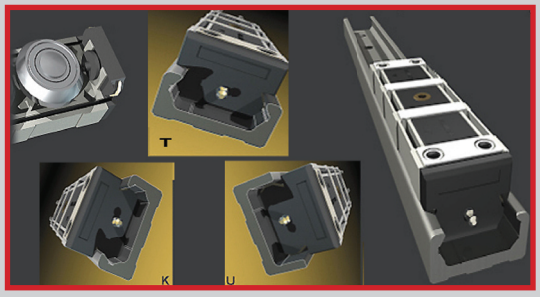

Rollon Compact Rail

Compact rail is a unique, precision, self aligning linear rail guidance system. Internal raceway protected roller design with adjustable preload provides, high speed, low noise and better tolerance to dirt and foreign particles.

Rails feature hardened and ground bearing surfaces for smooth motion and long life with sizes from 18 to 63 and load capacities of up to 1200kgf per slider. Combination of rail profiles can overcome mounting error saving manufacturing costs and prolonged service life.

Rollon X-Rail

A contoured rail available in Zinc plated steel or SUS316 stainless steel in lengths of up to 3 metres. Sliders are available in either Zinc plated or stainless steel with SUS420 roller bearings with load ratings of 80kg per slider. The stainless steel version is perfect for washdown applications.

Internal protected raceways and roller bearings for smooth reliable motion. Centre rollers are eccentric for adjustment of preload and rigidity control.

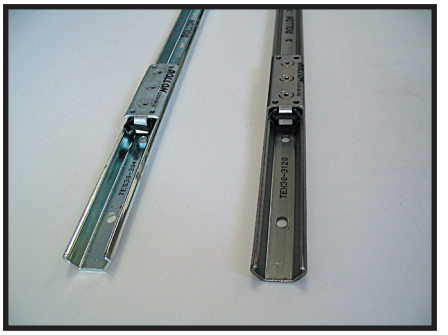



Rollon Ecoline

An economical guideway solution built within an aluminum extrusion. Rollers can be adjusted for preload and the nylon coated wheels offer quiet motion. Lateral seals for contamination protection. Up to 6m strokes without joining. An integrated belt driven version is also available for the ultimate in ease.

For more demanding applications enquire about Rollon Uniline.

Rod Ends

A quality range of rod ends from M5 to M35 and 3/16” to 1” UNF in female and male. Zinc plated steel with bronze or PTFE liners. Stainless PTFE rod ends are available from M6 to M16 & 1/4” to 1/2” male and female. A range of cam followers are also available from stock. Fine pitch rod ends are ideal for pneumatic cylinders.

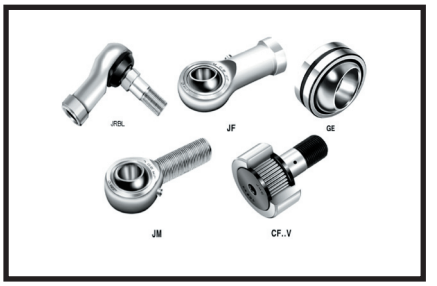

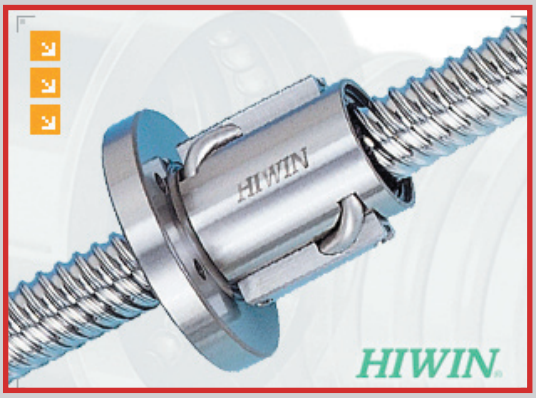

Ballscrews

A ballscrew is an ideal drive system where accuracy and high duty cycle are required. A range of leads are avaliable to suit required speed and machine response. Accuracies of 0.0035mm per 300mm are possible with precision ground shafts and 0.012mm per 300mm from rolled shafts.

We have a great stock range of ballscrews for industrial applications.

Trapezoidal Screw Threads

Trapezoidal screws are the metric equivalent of imperial ACME screws. For lower duty cycles or accuracy applications trapezoidal shafts and nuts provide a cost effective linear drive. Ideal for adjustment arms, presses and screw jacks.

Left and right hand screw shafts with bronze nuts from 10 to 40mm from stock. Stainless shaft and plastic nuts also available on indent.

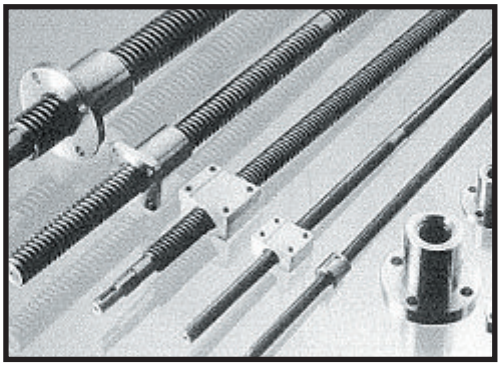

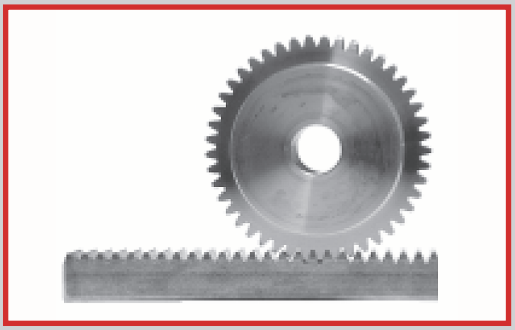

Spur Gears and racks

A traditional solution ideal for long length or high speed linear drives. We stock spur gears and racks from Mod1 to Mod4 pitch that can be heat treated.

Induction harden, helical, plastic and SS racks can be supplied with milled or ground teeth and pitch errors of less than 0.1mm per 1000mm.

Timing Belts and Pulleys

Megadyne are pioneers in timing belt drives and produce a wide range of urethane, steel SS or kevlar corded timing belts. A maintenance free solution for power transmission and linear drives.

Open ended and endless urethane and rubber timing belts along with a wide select of pulleys and clamping plates to meet your needs.





12/24V Linear Actuators

HIWIN manufacture a range of integrated actuators with either 12 or 24V DC motors. The range includes small ACME thread actuators ideal for home and office automation through to Ballscrew actuators with load ratings of up to 1000kg. Controllers and push button pendants are also available for a plug and play motion solution. High duty SKF actuators also avaliable.

Drive systems

A complete range of drive systems including Servo drives and VSDs from Yaskawa, Steppers from Kinco and AC motors from CMG.

Apex precision planetary gearheads and backlash free couplings are available to complete an entire linear drive system.



	Introduction
	Ordering Rail
	Linear Considerations
	Introduction to statistical life
	Maximum Speeds
	Lubrication
A	Rod ends / Sphericals and Cam followers
B	Ball bushes and shafting
C	Simplicity self-lubricating bushes
D	Rollon X – rail
E	Rollon Compact rail
F	LM profile rail
	Corrosion resistant linear
G	Trapezoidal screw shafts
H	Hand wheels and indicators
I	Ballscrew shafts
J	Shaft supports
K	Shaft couplings
L	Spur gear and racking
M	Timing belts and pulleys
N	Linear actuators
O	DC Brushed Motors
P	Stepper motors
Q	Servo Motors
R	AC drives
S	Precision Gear heads
T	Cable Chain
U	Ball transfer unit
	Appendix
	Hardness conversion
	Fits and tolerance

The information presented is accurate and correct to the best of our knowledge. This information may change without notice, if dimensions or load ratings are changed by the manufacturer. Purchasers acknowledge they are selecting the products for their particular application and are relying on their own expertise in making such selections. We assume no obligation or liability for the performance of items in service other than replacement for manufacturing defects.

For stock items we are happy to refund items within 7 days provided they are returned in a saleable condition. Please contact us if you wish to return items. A restocking fee may apply and any freight charges are not refundable. Items bought in on indent, assembled and/or modified may not be returned or refunded.

Our stock range of guidance and drive products allow systems to be built up to suit a wide range of application requirements. They can be combined into a complete linear system like the CAD model below.

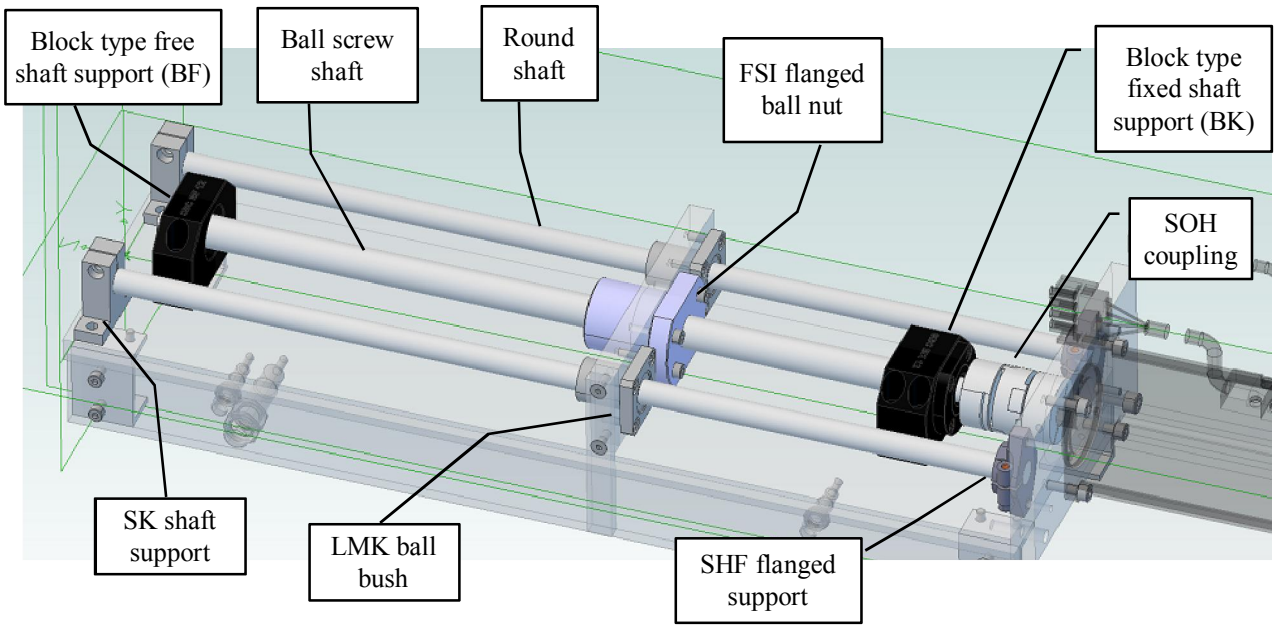

Ordering linear rail

Linear rail comes in stock lengths and can be cut to your required size for a minimal charge. Most rail systems can be joined for extra-long applications.

When ordering linear with fastener holes the pitch size of the rail holes needs to be considered. If a length of rail is requested without further details the cut rail will have the end holes symmetrically spaced. Alternatively you can specify the “G” distance from one end of the rail to the centre of the first hole.

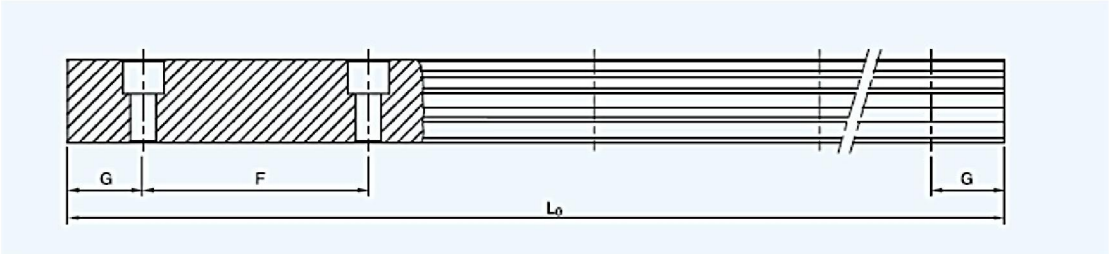

Example ordering code

TEX30-1200 (G=15)

Stainless steel Rollon X-rail 1200mm long with the first hole 15mm from one end. As X-rail has an 80mm hole pitch the other end will be 65mm to the first hole. If the G dimension was not specified the holes would be 40mm from each end.

Linear selection considerations

In selecting the most suitable linear system a number of factors that should be considered such as;

- Load and weight
- Stroke or length of travel
- Orientation vertical or horizontal
- Cantilever loads and overhanging geometry
- Speed
- Frequency
    - How often the motion is required
- Service life – Usually the number of years required
    - Excessive requirement will significantly increase size and costs
- Safety factor
    - How much margin should be built in?
    - What are the consequences of failure
        - Physical human safety
        - Production scheduling
        - Availability of parts
- Precision
    - What sort of preload is required - is low friction more important?
    - How accurate is the machine frame and mounting?
- Wash down and corrosion resistance
    - Food contamination a factor?
- Chemical environment considerations
- Driving mechanism
    - Belts, trapezoidal, actuator, ball screw. AC, DC, stepper or servo motors?

It is always best practise to use two rails and four bearings. This eliminates any moment or twisting loads on the bearings which greatly reduces the service life of the bearing.

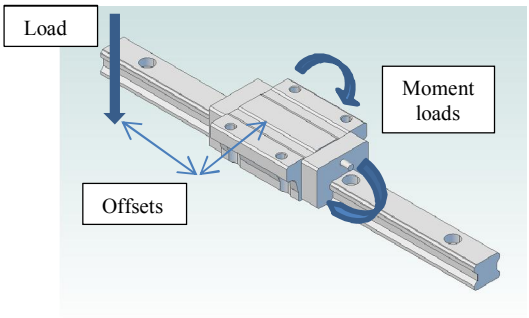

A load offset to a single bearing causes twisting moments on a bearing.

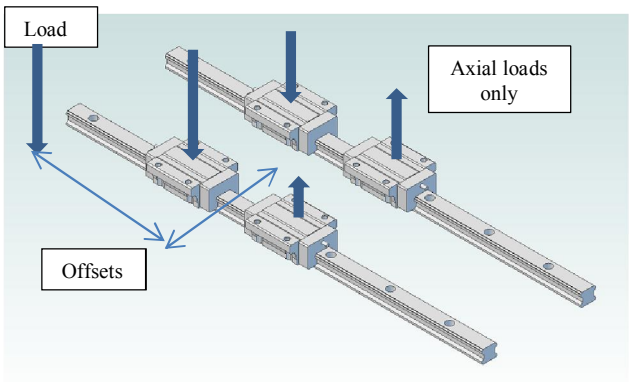

Use of two rails and four bearings means none of the bearings experience any twisting.

Introduction to statistical service life

All bearings have a rated static load which is the maximum load the bearing can withstand without permanent deformation of a bearing surface. During service a bearing system will fatigue as a normal process of the bearing surfaces being loaded and unloaded during motion. The dynamic load ratings are used to assess how long the bearing should last before failure due to metal fatigue.

There is a scientifically proven relationship for the life of 90% of the same bearings in ideal conditions. This is known as the statistical service life and the formula is shown below.

For a ball bearing system: $L = \left(\frac{C}{P}\right)^3 x\ 50km$

For a roller bearing system: $L = \left(\frac{C}{P}\right)^{\frac{10}{3}} x\ 100km$

L = Nominal travel
P = Pay load
C = Basic dynamic load rating

Note that a roller system has a greater statistical service life having a higher exponent and being based on a longer travel distance. Ball screws have a similar calculation but the dynamic load is in per million revolutions rather than kilometres.

In a real life situation there are a number of factors which are known to reduce the bearing life. These include hardness, temperature, speed, vibration and impacts and the number of sliders in contact. The nominal service life is an expanded calculation that accounts for some of the common factors.

$$L = \left(\frac{f_h x f_T x f_c}{f_w} x \frac{C}{P}\right)^3 x\ 50km$$

f_h = hardness factor
f_T = temperature factor
fc = contact factor
fw = load factor

Appropriate factors can be determined from the graphs and tables below.

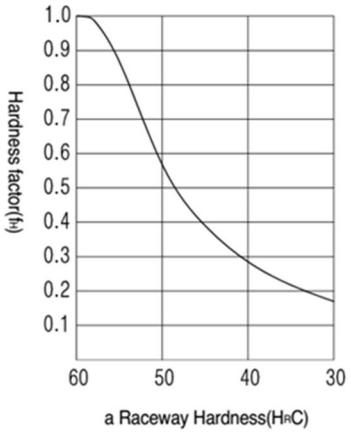

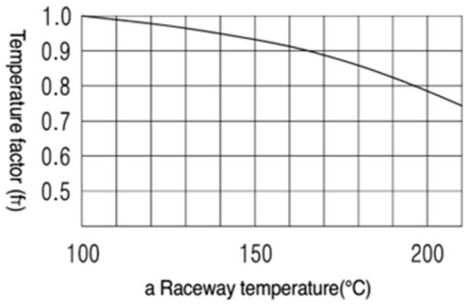

Contact factor f_c

# Bearings on same rail	Contact factor fc
2	0.81
3	0.72
4	0.66
5	0.61
6+	0.60

Load factor f_w

Load Condition	Speed	Load Factor f_w
No impact or vibration	Up to 0.25m/s	1-1.5
Slight Impact or vibration	Up to 1.0m/s	1.5-2.0
Consider impact and vibration	Over 1.0m/s	2.0-4.0

The payload in the calculation is the mean load that the bearing sees. This should include dynamic loads due to acceleration and deceleration as well as varying loading along the linear travel or during operation. Once the load on each bearing has been established and the appropriate safety factors selected then the statistical service life can be calculated. An iterative process is often required to arrive at the bearing size and type most suited to the application. A five year service life for a manufacturing application is generally considered a good target.

For plain bearing and screw shaft products a maximum static load and a pressure x velocity restriction (PV) applies but a specific service life is not able to be calculated.

Maximum speeds

The maximum speed a bearing can travel is limited by centrifugal forces. Roller type bearings can generally run faster than other types as the balls don't have to perform 180deg turns at the ends of the bearings.

Bearing type	Maximum speed
Standard ball bush:	1m/s
Profile rail:	2m/s
Super ball:	3m/s
Compact rail 18:	3m/s
Compact rail 28:	5m/s
Compact rail 43:	7m/s
Compact rail 63:	9m/s

These are indicative maximum speeds only. Running any of these bearings at this speed will greatly reduce the service life.

Lubrication

Studies show that anything from 50-70% of bearings do not achieve their service life due to lubrication or contamination issues. The ultimate lubrication system is a recirculating oil system but this is impractical in most linear systems and grease lubrication is by far the most common. Lithium soap grease of consistency NGLI2 is suitable for most situations. Maintenance checks should be performed to ensure bearings are not run dry or contaminated. Centrally plumbed or automatic lubrication systems are an option for demanding or difficult to lubrication applications.







Rod Ends

Female

Self-aligning bearing used for control linkages. Able to take tensile and compressive loads.

- Body: Carbon steel S45C (C45 Din)
- Ball: Carbon chrome steel S45C (100Cr6)
- Bush: Cu-Zn alloyed brass

Available in left and right hand threads

Sizes below 16 typically use a grease syringe fitting.



JF

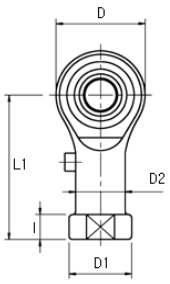

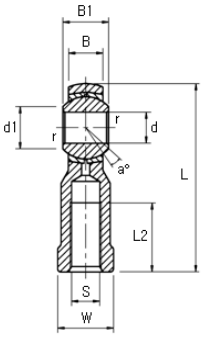

	Thread		Dimensions (mm)												Angle	Static Load	Mass
	d	Thread	D	B	B1	d1	L	l	L1	L2	W	D1	D2	r	a	Co(Kgf)	gr.
JF5	**5**	**M5X.8**	**16**	**6**	**8**	**7.7**	**35.1**	**4**	**27.1**	**14**	**9**	**11**	**9**	**0.5**	**13**	**570**	**16.5**
JF6	**6**	**M6X1**	**18.5**	**6.75**	**9**	**9**	**39.35**	**5**	**30.1**	**14**	**11**	**13**	**10**	**0.5**	**13**	**700**	**25**
JF8	**8**	**M8X1.25**	**23**	**9**	**12**	**10.4**	**49.1**	**6**	**37.5**	**17**	**14**	**16**	**12.5**	**0.5**	**13**	**1000**	**43**
JF10	**10**	**M10X1.5**	**27**	**10.5**	**14**	**12.9**	**58.6**	**8**	**44.6**	**21**	**17**	**19**	**15**	**0.5**	**13**	**1350**	**72**
JF10-1.25		**M10X1.25**															
JF12	**12**	**M12X1.75**	**31**	**12**	**16**	**15.8**	**67.1**	**7.5**	**51.6**	**24**	**19**	**22**	**17.5**	**0.5**	**13**	**1700**	**107**
JF12-1.25		**M12x1.25**															
JF14	**14**	**M14X2**	**34**	**13.5**	**19**	**16.9**	**75.2**	**9**	**58.2**	**27**	**22**	**25**	**20**	**0.5**	**15**	**2100**	**160**
JF14-1.50		**M14X1.5**															
JF16	**16**	**M16X2**	**38**	**15**	**21**	**19.3**	**84.7**	**9.5**	**65.7**	**33**	**24**	**27**	**22**	**0.5**	**15**	**2550**	**210**
JF16-1.50		**M16X1.5**															
JF18	**18**	**M18X1.5**	**43**	**16.5**	**23**	**21.7**	**93.2**	**10**	**71.7**	**36**	**27**	**31**	**25**	**0.5**	**15**	**3000**	**295**
JF20	**20**	**M20X1.5**	**46**	**18**	**25**	**23.8**	**101.2**	**11**	**78.2**	**40**	**30**	**34**	**27.5**	**0.5**	**15**	**3500**	**380**
JF22	**22**	**M22X1.5**	**52**	**20**	**28**	**25.8**	**110.2**	**12**	**84.2**	**43**	**32**	**37**	**30**	**0.5**	**15**	**4200**	**490**
JF24	**25**	**M24X2**	**60**	**22**	**31**	**29.8**	**124.2**	**12**	**94.2**	**50**	**36**	**42**	**33.5**	**0.5**	**15**	**7400**	**750**
JF24-1.50		M24X1.5															
JF25	**25**	**M25X1.5**	**60**	**22**	**31**	**29.8**	**124.2**	**12**	**94.2**	**50**	**36**	**42**	**33.5**	**0.5**	**15**	**7400**	**750**
JF26	25	M26X1.5	60	22	31	29.8	124.2	12	94.2	50	36	42	33.5	0.5	15	7400	750
JF30	**30**	**M30X2**	**73**	**21**	**32**	**34.4**	**145.3**	**16.5**	**108.8**	**50**	**47**	**49**	**40**	**0.5**	**15**	**9100**	**900**
JF30-1.50		M30X1.5															
JF35	**35**	**M36X2**	**82**	**23**	**35**	**39.8**	**173.3**	**17**	**132.3**	**60**	**49**	**58**	**48**	**0.5**	**15**	**11400**	**1400**
JF35-1.50		**M36X1.5**															

Rod ends from 20mm and above have steel on steel spherical plain bearings.

JF3/16	**3/16**	**#10X32**	**17**	**6**	**8**	**7.7**	**35**	**4**	**26.5**	**14**	**9**	**11**	**9**	**0.5**	**13**	**570**	**16.5**
JF1/4	**1/4**	**1/4X28**	**18.5**	**6.75**	**9**	**9**	**39.2**	**5**	**30**	**14**	**11**	**13**	**10**	**0.5**	**13**	**700**	**25**
JF5/16	**5/16**	**5/16X24**	**23**	**9**	**12**	**10.4**	**49**	**6**	**37.5**	**17**	**14**	**16**	**12.5**	**0.5**	**13**	**1000**	**43**
JF3/8	**3/8**	**3/8X24**	**27**	**10.5**	**14**	**12.9**	**58.5**	**8**	**45**	**21**	**17**	**19**	**15**	**0.5**	**13**	**1350**	**72**
JF7/16	**7/16**	**7/16X20**	**31**	**12**	**16**	**15.8**	**67**	**7.5**	**51.5**	**24**	**19**	**22**	**17.5**	**0.5**	**13**	**1700**	**107**
JF1/2	**1/2**	**1/2X20**	**31**	**12**	**16**	**15.8**	**67**	**7.5**	**51.5**	**24**	**19**	**22**	**17.5**	**0.5**	**13**	**1700**	**107**
JF5/8	**5/8**	**5/8X18**	**38**	**15**	**21**	**19.3**	**84.5**	**9.5**	**65.5**	**33**	**24**	**27**	**22**	**0.5**	**15**	**2550**	**210**
JF3/4	**3/4**	**3/4X16**	**46**	**18**	**25**	**23.8**	**101**	**11**	**78**	**40**	**30**	**34**	**27.5**	**0.5**	**15**	**3500**	**380**
JF7/8	**7/8**	**7/8X14**	**52**	**20**	**28**	**25.8**	**110**	**12**	**84**	**43**	**32**	**37**	**30**	**0.5**	**15**	**4200**	**490**
JF1	**1**	**1X12**	**60**	**22**	**31**	**29.6**	**124**	**12**	**94**	**50**	**36**	**42**	**33.5**	**0.5**	**15**	**5500**	**750**

Normal stock items are in bold type

A



Male

Self-aligning bearing used for control linkages. Able to take tensile and compressive loads.

- Body: Carbon steel S45C (C45 Din)
- Ball: Carbon chrome steel S45C (100Cr6)
- Bush: Cu-Zn alloyed brass

Available in left and right hand threads

Sizes below 16 typically use a grease syringe fitting.



JM

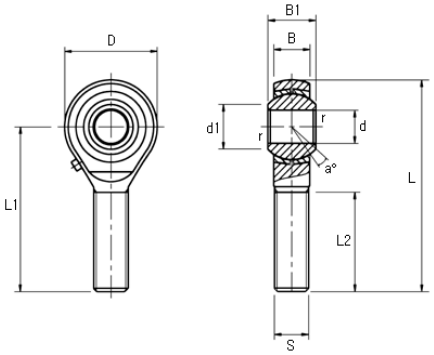

	Thread		Dimensions								Angle	Static Load	Mass
	d	Thread	D	B	B1	d1	L	L1	L2	r	a	Co(Kgf)	gr.
JM5	**5**	**M5X.8**	**17**	**6**	**8**	**7.7**	**42.5**	**34**	**20**	**0.5**	**13**	**350**	**12.5**
JM6	**6**	**M6X1**	**18.5**	**6.8**	**9**	**9**	**47.5**	**36.9**	**22**	**0.5**	**13**	**500**	**19**
JM8	**8**	**M8X1.25**	**23**	**9**	**12**	**10.4**	**54.5**	**43**	**25**	**0.5**	**13**	**700**	**32**
JM10	**10**	**M10X1.5**	**27**	**10.5**	**14**	**12.9**	**62.5**	**49**	**29**	**0.5**	**13**	**1100**	**54**
JM12	**12**	**M12X1.75**	**32**	**12**	**16**	**15.8**	**73.3**	**57.3**	**33**	**0.5**	**13**	**1700**	**85**
JM14	**14**	**M14X2**	**34**	**13.5**	**19**	**16.9**	**80.8**	**63.8**	**36**	**0.5**	**15**	**2100**	**126**
JM16	**16**	**M16X2**	**38**	**15**	**21**	**19.3**	**87.3**	**68.3**	**40**	**0.5**	**15**	**2550**	**185**
JM18	**18**	**M18X1.5**	**43**	**16.5**	**23**	**21.9**	**95.3**	**73.8**	**44**	**0.5**	**15**	**3000**	**260**
JM20	**20**	**M20X1.5**	**46**	**18**	**25**	**23.9**	**103.5**	**80.5**	**47**	**0.5**	**15**	**3500**	**340**
JM22	**22**	**M22X1.5**	**52**	**20**	**28**	**25.8**	**112.8**	**86.8**	**51**	**0.5**	**15**	**4200**	**435**
JM24	**25**	**M24X2**	**60**	**22**	**31**	**29.8**	**126.8**	**98.8**	**57**	**0.5**	**15**	**7400**	**650**
JM25	**25**	**M25X.15**	**60**	**22**	**31**	**29.8**	**126.8**	**98.8**	**57**	**0.5**	**15**	**7400**	**650**
JM30	**30**	**M30X2**	**73**	**21**	**32**	**34.4**	**147.8**	**111.3**	**66**	**0.5**	**15**	**9100**	**910**
JM35	**35**	**M36X2**	**82**	**23**	**35**	**39.8**	**176.2**	**135.2**	**80**	**0.5**	**15**	**11400**	**1440**

Rod ends from 20mm and above have steel on steel spherical plain bearings.

JM3/16	**3/16**	**#10X32**	**17**	**6**	**8**	**7.7**	**42.5**	**34**	**20**	**0.5**	**13**	**350**	**12.5**
JM1/4	**1/4**	**1/4X28**	**18.5**	**6.8**	**9**	**9**	**46**	**36.73**	**22**	**0.5**	**13**	**500**	**19**
JM5/16	**5/16**	**5/16X24**	**23**	**9**	**12**	**10.4**	**54**	**42.5**	**25**	**0.5**	**13**	**700**	**32**
JM3/8	**3/8**	**3/8X24**	**27**	**10.5**	**14**	**12.9**	**62**	**48.5**	**29**	**0.5**	**13**	**1100**	**54**
JM7/16	**7/16**	**7/16X20**	**32**	**12**	**16**	**15.8**	**73**	**57**	**33**	**0.5**	**13**	**1700**	**85**
JM1/2	**1/2**	**1/2X20**	**32**	**12**	**16**	**15.8**	**73**	**57**	**33**	**0.5**	**13**	**1700**	**85**
JM5/8	**5/8**	**5/8X18**	**38**	**15**	**21**	**19.3**	**86.5**	**67.5**	**40**	**0.5**	**15**	**2550**	**185**
JM3/4	**3/4**	**3/4X16**	**46**	**18**	**25**	**23.9**	**103**	**80**	**47**	**0.5**	**15**	**3500**	**340**
JM7/8	**7/8**	**7/8X14**	**52**	**20**	**28**	**25.8**	**112**	**86**	**51**	**0.5**	**15**	**4200**	**435**
JM1	**1**	**1X12**	**60**	**22**	**31**	**29.8**	**126**	**96**	**57**	**0.5**	**15**	**5500**	**600**

Normal stock items are in bold type

Fine pitch metric male are available in stainless steel.



Teflon Liner

Self lubricating PTFE liner
Low friction, minimal maintenance and water resistance

Available in left and right hand threads.

-200ºC - +260ºC temperature rating.



JFT

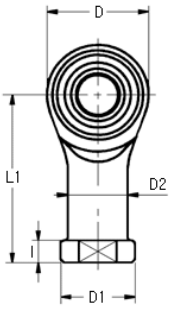

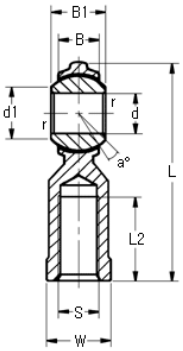

	Thread		Dimensions												Angle	Static Load	Mass
	d	Thread	D	B	B1	d1	L	l	L1	L2	W	D1	D2	r	a	Co(Kgf)	gr.
JFT5	**5**	**M5X.8**	**16**	**6**	**8**	**7.7**	**35**	**4**	**27**	**14**	**9**	**11**	**9**	**0.5**	**13**	**400**	**16.5**
JFT6	**6**	**M6X1**	**18**	**6.75**	**9**	**9**	**39**	**5**	**30**	**14**	**11**	**13**	**10**	**0.5**	**13**	**510**	**25**
JFT8	**8**	**M8X1.25**	**23**	**9**	**12**	**10.4**	**47**	**5**	**35.5**	**17**	**14**	**16**	**13**	**0.5**	**13**	**760**	**43**
JFT10	**10**	M10X1.5	**27**	**10.5**	**14**	**12.9**	**56**	**7**	**42.5**	**21**	**17**	**19**	**15**	**0.5**	**13**	**960**	**72**
JFT10-1.25		**M10X1.25**															
JFT12	**12**	**M12X1.75**	**31**	**12**	**16**	**15.8**	**66**	**7.5**	**50.5**	**24**	**19**	**22**	**17.5**	**0.5**	**13**	**1120**	**107**
JFT12–1.25		**M12x1.25**															
JFT14	14	M14X2	35	13.5	19	16.9	75	8.5	57.5	27	22	25	20	0.5	15	1550	160
JFT14-1.50		M14X1.5															
JFT16	**16**	M16X2	**39**	**15**	**21**	**19.3**	**83**	**8.5**	**63.5**	**33**	**24**	**27**	**22**	**0.5**	**15**	**2060**	**210**
JFT16-1.50		**M16X1.5**															
JFT18	**18**	**M18X1.5**	**43**	**16.2**	**23**	**21.7**	**92**	**10**	**71.5**	**36**	**27**	**31**	**25**	**0.5**	**15**	**2570**	**295**
JFT20	**20**	**M20X1.5**	**46**	**18**	**25**	**23.8**	**101**	**11**	**78**	**40**	**30**	**34**	**27.5**	**0.5**	**15**	**2840**	**380**

Normal stock items are in bold type

Self lubricating PTFE liner
Low friction, minimal maintenance and water resistance

Available in left and right hand threads.

-200ºC - +260ºC temperature rating.



JMT

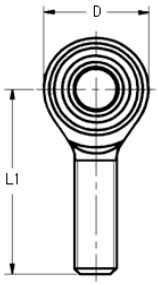

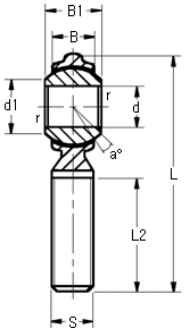

	Thread		Dimensions								Angle	Static Load	Mass
	d	Thread	D	B	B1	d1	L	L1	L2	r	a	Co(Kgf)	gr.
JMT5	5	M5X.8	17	6	8	7.7	42	33.5	20	0.5	13	350	12.5
JMT6	6	M6X1	18.5	6.75	9	9	46	36.75	22	0.5	13	500	19
JMT8	**8**	**M8X1.25**	**23**	**9**	**12**	**10.4**	**53**	**41.5**	**25**	**0.5**	**13**	**700**	**32**
JMT10	**10**	**M10X1.5**	**27**	**10.5**	**14**	**12.9**	**61**	**47.5**	**26.5**	**0.5**	**13**	**960**	**54**
JMT12	**12**	**M12X1.75**	**31**	**12**	**16**	**15.8**	**69**	**53.5**	**33**	**0.5**	**13**	**1120**	**85**
JMT14	14	M14X2	35	13.5	19	16.9	76.5	59	36	0.5	15	1550	126
JMT16	**16**	**M16X2**	**39**	**15**	**21**	**19.3**	**85**	**65.5**	**40**	**0.5**	**15**	**2060**	**185**
JMT18	**18**	**M18X1.5**	**43**	**16.2**	**23**	**21.7**	**94.5**	**73**	**44**	**0.5**	**15**	**2570**	**260**
JMT20	20	M20X1.5	46	18	25	23.8	103	80	47	0.5	15	2840	340

Normal stock items are in bold type



Stainless Rod Ends Metric Female

Stainless steel 306 body with PTFE liner. Ball 440C heat-treated.

Left and right hand available.



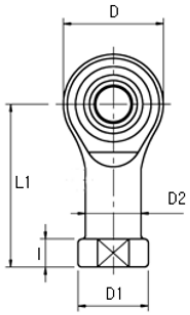

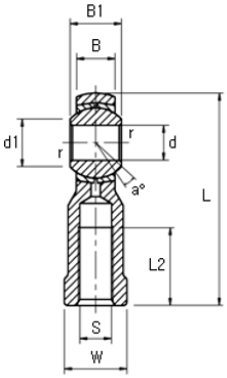

	Dimensions											angle	Static load Co(Kgf)	Mass gr.
	d	B1	B	D	S	L1	L2	D2	D1	I	W			
JFTS5	5	8	6	20	M5x0.8	29	9	10	13	5	8	9	350	16.5
JFTS6	6	9	7.5	20	M6x1	30	9	10	13	5	10	9	500	25
JFTS8	8	12	9.5	24	M8x1.25	36	12	12.5	16	5	13	12	700	43
JFTS10	10	14	11.5	30	M10x1.5	43	15	15	19	6.5	16	10	1100	72
JFTS10-1.25P	10	14	11.5	30	M10x1.25	43	15	15	19	6.5	16	10	1100	72
JFTS12	12	16	12.5	34	M12x1.75	50	18	17.5	22	6.5	18	12	1700	110
JFTS12-1.25P	12	16	12.5	34	M12x1.25	50	18	17.5	22	6.5	18	12	1700	110
JFTS14	14	19	13.5	34	M14x2	57		20	25	8	22	14	2100	160
JFTS14-1.5P	14	19	13.5	34	M14x1.5	57		20	25	8	22	14	2100	160
JFTS16	16	21	15.5	42	M16x2	64	24	22	27	8	24	14	2550	210
JFTS16-1.5P	16	21	15.5	42	M16x1.5	64	24	22	27	8	24	14	2550	210
JFTS18-1.5P	18	23	16.5	42	M18x1.5	71		25	31	10	27	15	3000	295
JFTS20	20	25	18.5	50	M20x1.5	77	30	27.5	34	10	30	15	3500	380
JFTS22	22	28	20	54	M22x1.8	85	42	29	36	16	30	15	3750	475
JFTS24	25	31	22	60	M24x2	94	45	34	43	14	36	15	4500	725
JFTS30	30	37	25	70	M30x2	110	45	38	50	19	40	17	5000	1000

Normal stock items are in bold type



A

Stainless Rod Ends Metric Male

Stainless steel 306 body with PTFE liner. Ball 440C heat-treated.

Left and right hand available.



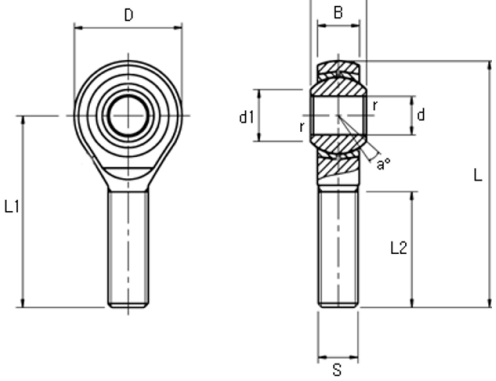

	Dimensions							angle	Static load Co(Kgf)	Mass gr.
	d	B1	B	D	S	L1	L2			
JMTS5	**5**	**8**	**5.5**	**20**	**M5x0.8**	**32**	**20**	**9**	**350**	**16.5**
JMTS6	**6**	**9**	**7.5**	**20**	**M6x1**	**36**	**21**	**9**	**500**	**19**
JMTS8	**8**	**12**	**9.5**	**24**	**M8x1.25**	**41**	**25**	**12**	**700**	**32**
JMTS10	**10**	**14**	**11.5**	**30**	**M10x1.5**	**47**	**28**	**10**	**1100**	**54**
JMTS10-1.25P	**10**	**14**	**11.5**	**30**	**M10x1.25**	**47**	**28**	**10**	**1100**	**54**
JMTS12	**12**	**16**	**12.5**	**34**	**M12x1.75**	**53**	**32**	**12**	**1700**	**85**
JMTS12-1.25P	**12**	**16**	**12.5**	**34**	**M12x1.25**	**53**	**32**	**12**	**1700**	**85**
JMTS14-1.5	**14**	**21**	**13.5**	**39**	**M14x1.5**	**59**	**36**	**14**	**1850**	**126**
JMTS16	**16**	**21**	**15.5**	**42**	**M16x2**	**65**	**37**	**14**	**2550**	**185**
JMTS16-1.5P	**16**	**21**	**15.5**	**42**	**M16x1.5**	**65**	**37**	**14**	**2550**	**185**
JMTS18	**18**	**23**	**16**	**46**	**M18x1.5**	**72**	**42**	**14**	**3000**	**220**
JMTS20	**20**	**25**	**18.5**	**50**	**M20x1.5**	**80**	**45**	**14**	**3500**	**340**
JMTS22	**22**	**28**	**20**	**54**	**M22x1.5**	**85**	**52**	**14**	**3750**	**450**
JMTS24	**25**	**31**	**22**	**60**	**M24x2**	**95**	**55**	**15**	**4500**	**600**
JMTS30	**30**	**37**	**25**	**70**	**M30x2**	**110**	**68**	**17**	**5000**	**1000**

Normal stock items are in bold type



Stainless Rod Ends Imperial

Stainless steel 306 body with PTFE liner. Ball 440C heat-treated.

Left and right hand available.



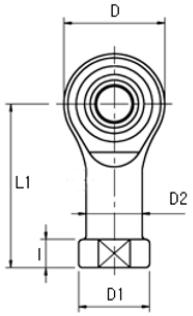

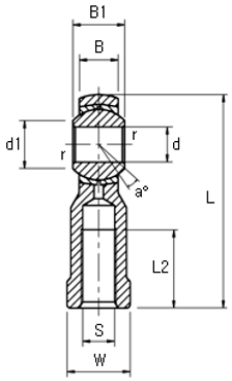

	Dimensions												Static Load kgf		Weight (gr)
	d	B1	B	D	L1	L2	D1	W	D2	l	Ball Dia	Thread, S	Radial	Axial	
JFTS3/16	**0.19**	**0.312**	**0.25**	**0.625**	**1.062**	**0.562**	**0.406**	**0.312**	**0.312**	**0.187**	**0.4375**	**0.19 UNF-32**	**614**	**226**	**14**
JFTS1/4	**0.25**	**0.375**	**0.281**	**0.75**	**1.312**	**0.75**	**0.468**	**0.375**	**0.375**	**0.187**	**0.5156**	**0.25 UNF-28**	**691**	**272**	**23**
JFTS5/16	**0.313**	**0.437**	**0.344**	**0.875**	**1.375**	**0.75**	**0.5**	**0.437**	**0.437**	**0.187**	**0.625**	**0.3125 UNF-24**	**952**	**419**	**37**
JFTS3/8	**0.375**	**0.5**	**0.406**	**1**	**1.625**	**0.937**	**0.687**	**0.562**	**0.5**	**0.25**	**0.7187**	**0.375 UNF-24**	**1315**	**612**	**59**
JFTS7/16	**0.438**	**0.562**	**0.437**	**1.125**	**1.812**	**1.062**	**0.75**	**0.625**	**0.562**	**0.25**	**0.8125**	**0.4375 UNF-20**	**1632**	**793**	**82**
JFTS1/2	**0.5**	**0.625**	**0.5**	**1.312**	**2.125**	**1.187**	**0.875**	**0.75**	**0.625**	**0.25**	**0.937**	**0.5 UNF-20**	**2041**	**1020**	**132**
JFTS5/8	**0.625**	**0.75**	**0.562**	**1.5**	**2.5**	**1.5**	**1**	**0.875**	**0.75**	**0.312**	**1.125**	**0.625 UNF-18**	**2449**	**1270**	**191**
JFTS3/4	**0.75**	**0.875**	**0.687**	**1.75**	**2.875**	**1.75**	**1.125**	**1**	**0.875**	**0.312**	**1.312**	**0.75 UNF-16**	**3447**	**1859**	**286**

Normal stock items are in bold type

Stainless steel 306 body with PTFE liner. Ball 440C heat-treated.

Left and right hand available.



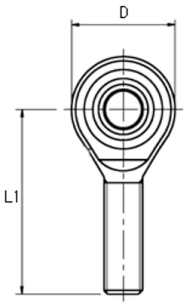

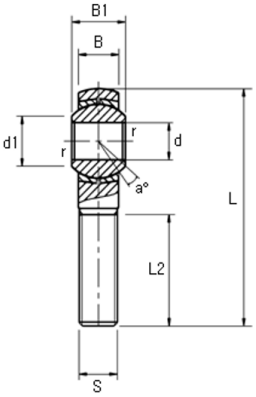

	Dimensions								Static Load (kgf)		Weight gr
	d	B1	B	D	L1	L2	Ball Dia	Thread, S	Radial	Axial	
JMTS3/16	**0.19**	**0.312**	**0.25**	**0.625**	**1.25**	**0.75**	**0.4375**	**0.19 UNF-32**	**306**	**215**	**14**
JMTS1/4	**0.25**	**0.375**	**0.281**	**0.75**	**1.562**	**1**	**0.5156**	**0.25 UNF-28**	**453**	**272**	**23**
JMTS5/16	**0.3125**	**0.437**	**0.344**	**0.875**	**1.875**	**1.25**	**0.625**	**0.3125 UNF-24**	**771**	**408**	**37**
JMTS3/8	**0.375**	**0.5**	**0.406**	**1**	**1.938**	**1.25**	**0.7187**	**0.375 UNF-24**	**1270**	**589**	**55**
JMTS7/16	**0.4375**	**0.562**	**0.437**	**1.125**	**2.125**	**1.375**	**0.8125**	**0.4375 UNF-20**	**1610**	**748**	**78**
JMTS1/2	**0.5**	**0.625**	**0.5**	**1.312**	**2.438**	**1.5**	**0.937**	**0.5 UNF-20**	**2041**	**1065**	**123**
JMTS5/8	**0.625**	**0.75**	**0.562**	**1.5**	**2.625**	**1.625**	**1.125**	**0.625 UNF-18**	**2449**	**1270**	**186**
JMTS3/4	**0.75**	**0.875**	**0.687**	**1.75**	**2.875**	**1.75**	**1.312**	**0.75 UNF-16**	**3458**	**1814**	**295**

Normal stock items are in bold type



Ball Joints

Ideal for linkage control where rotating and oscillating variation exists. Complete with rubber boots for weatherproofing and grease control.

Body Zinc Alloy

Available in left and right hand threads. Left hand ball joints have left hand thread on the female shank only. Male stud is always right hand.



ZBL
(RBL)

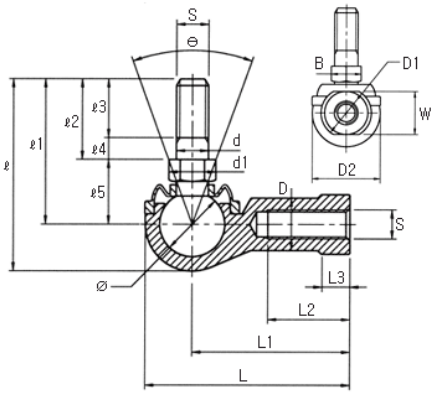

		Dimensions																	Tilting Angle	Yield Strength	Static Load	Mass
	Thread	D	L	L1	L2	L3	D1	W	D2	d	l	l1	l2	l3	l4	l5	d1	B		Pk(Kgf)	Co(Kgf)	gr.
JRBL5	**M5X.8**	**9**	**35**	**27**	**14**	**4**	**11**	**9**	**16**	**5**	**31.7**	**24.5**	**12.9**	**8**	**4.9**	**11.6**	**9**	**8**	**50**	**230**	**940**	**24**
JRBL6	**M6X1**	**10**	**40**	**30**	**14**	**5**	**13**	**11**	**19**	**6**	**35.5**	**27**	**16**	**11**	**5**	**11**	**9.2**	**8**	**50**	**360**	**1230**	**37**
JRBL8	**M8X1.25**	**12.5**	**49**	**36**	**17**	**5**	**16**	**14**	**23**	**8**	**42.5**	**31**	**17**	**12**	**5**	**14**	**13.2**	**12**	**50**	**670**	**1950**	**67**
JRBL10	**M10X1.25**	**15**	**58**	**43**	**21**	**6.5**	**19**	**17**	**28**	**10**	**48.5**	**38**	**21**	**17.5**	**3.5**	**17**	**15.4**	**14**	**50**	**1090**	**2810**	**110**
JRBL10B	**M10X1.5**										**53.5**	**42**	**25**	**21**	**4**							113
JRBL12	**M12X1.25**	**17.5**	**66**	**50**	**25**	**8**	**22**	**19**	**32**	**12**	**55**	**42**	**23**	**17**	**6**	**19**	**18.7**	**17**	**50**	**1670**	**3820**	**165**
JRBL12B	**M12X1.75**										**63**	**49**	**30**	**24**	**6**							**170**
JRBL14	**M14X1.5**	**20**	**75**	**57**	**26**	**8**	**25**	**22**	**36**	**14**	**73.5**	**58**	**34.5**	**22**	**12.5**	**23.5**	**21**	**19**	**50**	**2020**	**4990**	**255**
JRBL14B	**M14X2**										**79.5**	**64**	**40.5**	**28**	**12.5**							**260**
JRBL16	**M16X1.5**	**22**	**84**	**64**	**32**	**10**	**27**	**22**	**39**	**16**	**77**	**60**	**36.5**	**23**	**13.5**	**23.5**	**22**	**20**	**40**	**2740**	**4990**	**335**
JRBL18	M18X1.5	25	93	71	34	11	31	27	44	18	90	68	41.5	25	16.5	26.5	24.5	22	40	3400	6310	465

Normal stock items are in bold type



Thrust Joints

Used in linear motion to absorb eccentricity when installed on the end of hydraulic and pneumatic cylinders.



THRUST JOINTS
TJ(FJ)

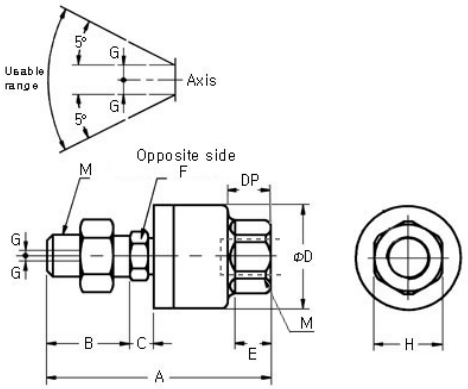

	Thread		Dimensions (mm)								Permissible Eccentricity	Tensile & Comp Strength	Cylinder Bore Diameter
	M	DP	A	B	C	D	E	F	H	Tilting Angle	G	Max Kgf	
TJ5	M5X.8	7	34.5	14	2	16	5	6	10	10	0.5	12	10,15
TJ6	**M6X1**	**7**	**34.5**	**14**	**2**	**16**	**5**	**6**	**10**	**10**	**0.5**	**12**	**15**
TJ8	**M8X1.25**	**8**	**44**	**17.5**	**4.5**	**21**	**7**	**8**	**13**	**10**	**0.5**	**110**	**20**
TJ10	**M10X1.25**	**9**	**49.5**	**19.5**	**5**	**24**	**8**	**10**	**17**	**10**	**0.5**	**250**	**25,30**
TJ12	**M12X1.75**	**13**	**60**	**20**	**6**	**31**	**11**	**12**	**22**	**10**	**0.75**	**440**	**30,40**
TJ14	M14X1.5	13	60	20	6	31	11	14	22	10	0.75	600	40
TJ16	**M16X1.5**	**15**	**71.5**	**22**	**7.5**	**41**	**13.5**	**16**	**27**	**10**	**1**	**1100**	**50**
TJ16-2	*M16X2*												
TJ18	M18X1.5	15	74.5	25	7.5	41	13.5	18	27	10	1	1100	50,63
TJ20	M20X1.5	**18**	**90.5**	**30**	**9.5**	**50**	**16**	**20**	**32**	**10**	**1.25**	**1800**	**80**
TJ20-2	***M20X2.5***												
TJ22	M22X1.5	18	89.5	29	9.5	50	16	22	32	10	1.25	1800	80
TJ24	M2411.5	24	110	35	11.5	59.5	20	26	41	10	2	2800	100
TJ24-3	*M24X3*												
TJ26	M26X1.5	24	110	35	11.5	59.5	20	26	41	10	2	2800	100
TJ30	M30X1.5	38	152	45	14	79	22	30	46	10	2	5400	125,140
TJ30-2	*M30X2*												
TJ36	M36X1.5	42	178	55	16	96	24	36	55	10	3	7100	160

Normal stock items are in bold type

Spherical Planes

Standard

Steel on steel metric sealed. Ideal to fit control arms into custom fittings and housings.



GE

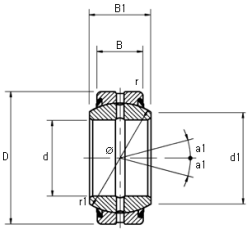

GE..ES-2RS

	Dimensions								Tilting Angle	Tilting Angle	Dynamic Load Rating	Static Load Rating	Mass
	d	D	B	B1	d1	Ball Dia	r1 min	r1	a	a1	C(Kgf)	Co(Kgf)	gr.
GE10E	**10**	**19**	**6**	**9**	**13**	**16**	**0.3**	**0.3**	**12**		**960**	**5760**	**12**
GE12E	**12**	**22**	**7**	**10**	**15**	**18**	**0.3**	**0.3**	**11**		**1260**	**7560**	**17**
GE15ES-2RS	**15**	**26**	**9**	**12**	**18.4**	**22**	**0.3**	**0.3**		**5**	**1980**	**11900**	**32**
GE17ES-2RS	**17**	**30**	**10**	**14**	**20.7**	**25**	**0.3**	**0.3**		**7**	**2500**	**15000**	**49**
GE20ES-2RS	**20**	**35**	**12**	**16**	**24.2**	**29**	**0.3**	**0.3**		**6**	**3480**	**20900**	**65**
GE25ES-2RS	**25**	**42**	**16**	**20**	**29.3**	**35.5**	**0.6**	**0.6**		**4**	**5680**	**34100**	**115**
GE30ES-2RS	**30**	**47**	**18**	**22**	**34.2**	**40.7**	**0.6**	**0.6**		**4**	**7330**	**44000**	**160**
GE35ES-2RS	**35**	**55**	**20**	**25**	**39.8**	**47**	**0.6**	**1**		**4**	**9400**	**56400**	**258**
GE40ES-2RS	**40**	**62**	**22**	**28**	**45**	**53**	**0.6**	**1**		**4**	**11700**	**70000**	**315**
GE45ES-2RS	45	68	25	32	50.8	60	0.6	1		4	15000	90000	413
GE50ES-2RS	**50**	**75**	**28**	**35**	**56**	**66**	**0.6**	**1**		**4**	**18500**	**111000**	**560**
GE60ES-2RS	60	90	36	44	66.8	80	1	1	6	3	28800	173000	1100
GE70ES-2RS	**70**	**105**	**40**	**49**	**77.9**	**92**	**1**	**1**	**6**	**4**	**36800**	**221000**	**1540**
GE80ES-2RS	80	120	45	55	89.4	105	1	1	6	4	47300	284000	2290
GE90ES-2RS	**90**	**130**	**50**	**60**	**98.1**	**115**	**1**	**1**	**5**	**3**	**57500**	**345000**	**2820**

Normal stock items are in bold type

Other Types

SB
Wide High Load



JET
Teflon Liner



JS
Steel on Composite



JETS
Teflon Liner Stainless





Track Rollers and Cam Followers

Standard Stud Type Track Roller

Crowned type CF_UUR compensates for parallelism errors.

Full complement needle rollers CR_VUUR for higher loads

Other types available
- Cylindrical type CF_UU
- Imperial type CR_UU

Second figures for load and weights are for full complement.



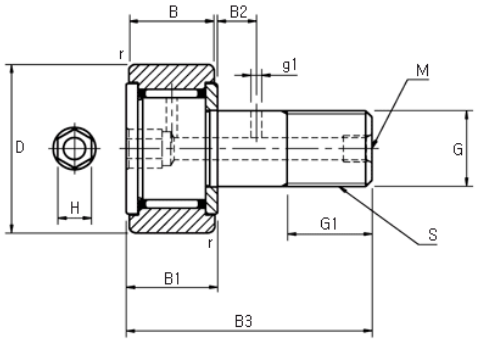

			Dimensions										Minimum Clamping	Dynamic Load Rating 10^6rev	Static Load Rating	Limiting Speed	Mass
Crowned Outer	**Full Complement**	**Thread (GxS)**	**H**	**D**	**B**	**B1**	**B3**	**M**	**g1**	**G1**	**B2**	**r**	**Diameter**	**C(Kgf)**	**Co(Kgf)**	**RPM**	**gr.**
CF5UUR	CF5VUUR	M5X.8	3	13	9	10	23			7.5		0.5	9.7	280/400	180/280	29000/15000	10.5/11
CF6UUR	CF6VUUR	**M6X1**	**3**	**16**	**11**	**12**	**28**			**9**		**0.5**	**11**	**270**/710	**170**/870	**25000**/12000	**18.5**/19
CF8UUR	CF8VUUR	**M8X1.25**	**4**	**19**	**11**	**12**	**32**			**11**		**0.5**	**13**	**300**/830	**210**/1140	**20000**/9000	**28.5**/29
CFA10UUR	CFA10VUUR	**M10X1**	**4**	22	**12**	**13**	**36**			**13**		**1**	**15**	**410/970**	**320**/1480	**17000**/7000	45/46
CFA10-1UUR	CFA10-1VUUR			**26**													**60/61**
CF10UUR	CF10VUUR	**M10X1.25**	**4**	**22**	**12**	**13**	**36**			**13**		**1**	**15**	**410**/970	**320**/1480	**17000**/7000	**45**/46
CF10-1UUR	CF10-1VUUR			26													60/61
CF12UUR	CF12VUUR	**M12X1.5**	**6**	**30**	**14**	**15**	**40**	**M6X1**	**3**	**14**	**6**	**1.5**	**20**	**590**/1370	**450**/2010	**14000**/6000	**95**/97
CF12-1UUR	CF12-1VUUR			32													105/107
CF16UUR	**CF16VUUR**	**M16X1.5**	**6**	**35**	**18**	**19.5**	**52**	**M6X1**	**3**	**18**	**8**	**1.5**	**24**	**850/2110**	**760**/3840	**10000**/4500	**170**/173
CF18UUR	CF18VUUR	**M18X1.5**	**8**	**40**	**20**	**21.5**	**58**	**M6X1**	**3**	**20**	**10**	**1.5**	**26**	**1180**/2580	**1220**/5240	**8500**/3500	**250**/255
CF20UUR	CF20VUUR	**M20X1.5**	**8**	**52**	**24**	**25.5**	**66**	**M6X1**	**3**	**22**	**12**	**1.5**	**36**	**1630/3380**	**1690**/6580	**7000**/3500	**460**/465
CF20-1UUR	**CF20-1VUUR**			47													385/390
CF24UUR	CF24VUUR	M24X1.5	8	62	29	30.5	80	M6X1	3	25	12	1.5	40	2160/4750	2210/9390	6500/3000	815/820
CF24-1UUR	CF24-1VUUR			72													1140/1140
CF30UUR	CF30VUUR	M30X1.5	8	80	35	37	100	M6X1	3	32	15	2	46	2830/6900	3700/14700	5000/2000	1870/1870
CF30-1UUR	CF30-1VUUR			85													2030/2030
CF30-2UUR	CF30-2VUUR			90													2220/2220

Normal stock items are in bold type

Eccentric Ring Stud Type Track Roller

Eccentric ring for adjustment of radial clearance. Compensates for precision errors and allows for backlash adjustment.

Adjustment can be made by turning shaft by hex key in bearing face.

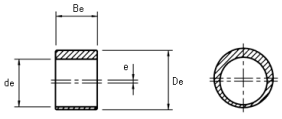

o	Type	de (R7)	De (h9)	Be	e
M6	CF6	6 $^{-0.011}_{-0.023}$	9 $^{0}_{-0.036}$	7 $^{0.1}_{0}$	0.5
M8	CF8	8 $^{-0.013}_{-0.028}$	11 $^{0}_{-0.043}$	9 $^{0.1}_{0}$	0.5
M10	CF10	10 $^{-0.013}_{-0.028}$	13 $^{0}_{-0.043}$	10 $^{0.1}_{0}$	0.5
M12	CF12	12 $^{-0.016}_{-0.034}$	15 $^{0}_{-0.043}$	11 $^{0.1}_{0}$	0.5
M16	CF16	16 $^{-0.016}_{-0.034}$	20 $^{0}_{-0.052}$	14 $^{0.1}_{0}$	1
M18	CF18	18 $^{-0.016}_{-0.034}$	22 $^{0}_{-0.052}$	16 $^{0.1}_{0}$	1
M20	CF20	20 $^{-0.02}_{-0.041}$	24 $^{0}_{-0.052}$	18 $^{0.1}_{0}$	1
M24	CF24	24 $^{-0.02}_{-0.041}$	28 $^{0}_{-0.052}$	22 $^{0.1}_{0}$	1
M30	CF30	30 $^{-0.02}_{-0.041}$	35 $^{0}_{-0.062}$	29 $^{0.1}_{0}$	1.5

Ball bushes

Ball bushes are the mainstay of linear motion systems. They provide an economical solution for precision measuring equipment, drilling machines, punching presses, printing and food packaging machines. Bushes are available in open and closed formats, flanged and slim profile forms. The correct tolerance and hardened shaft must be used for reliable performance and these can be supplied with chrome plating or 440 stainless steel. In general ball bushes are better for lighter loads and lower duty cycles.

Complete systems can be supplied for bolt in simplicity including precision ground and hardened shafts, bushes, case units and shaft supports. Dimensions are to an industry standard for consistency and parts for breakdowns are normally readily available.

Bushes with Nickel coating and SS balls for aggressive chemical environments can be supplied on request.



SAMICK PRECISION IND. CO., LTD.

Linear Rail System SBC

ISO 9000

Japanese Dimension



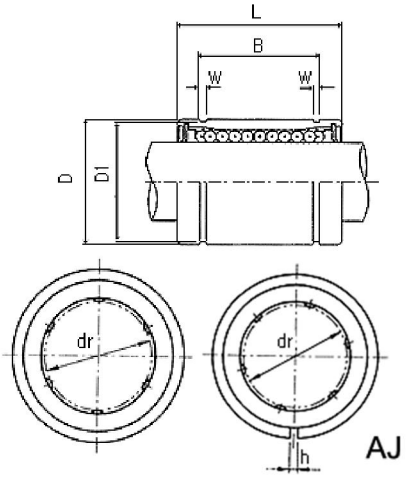

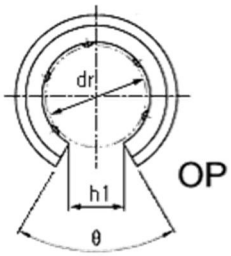

						Dimensions								Opening Angle	Dynamic Load (50km)	Static Load	Mass
Standard	# Circuits	OPEN	# Circuits	Adjustable	# Circuits	d	D	L	B	W	D1	h	h1	Degrees	C (N)	Co (N)	gr.
LM5UU	**4**					**5**	**10**	**15**	**10.2**	**1.1**	**9.6**				**167**	**206**	**4**
LM6UU	**4**			LM6UUAJ	4	**6**	**12**	**19**	**13.5**	**1.1**	**11.5**	**1**			**200**	**260**	**8**
LM8SUU	4			LM8SUUAJ	4	8	15	17	11.5	1.1	14.3	1			170	220	11
LM8UU	**4**			LM8UUAJ	4	**8**	**15**	**24**	**17.5**	**1.1**	**14.3**	**1**			**260**	**400**	**16**
LM10UU	**4**			LM10UUAJ	4	**10**	**19**	**29**	**22**	**1.3**	**18**	**1**			**370**	**540**	**30**
LM12UU	**4**	LM12UUOP	**3**	LM12UUAJ	4	**12**	**21**	**30**	**23**	**1.3**	**20**	**1.5**	**8**	**80**	**410**	**590**	**31.5**
LM13UU	4	LM13UUOP	3	LM13UUAJ	4	13	23	32	23	1.3	22	1.5	9	80	500	770	43
LM16UU	**5**	**LM16UUOP**	**4**	LM16UUAJ	5	**16**	**28**	**37**	**26.5**	**1.6**	**27**	**1.5**	**11**	**80**	**770**	**1170**	**69**
LM20UU	**5**	**LM20UUOP**	**4**	LM20UUAJ	5	**20**	**32**	**42**	**30.5**	**1.6**	**30.5**	**1.5**	**11**	**60**	**860**	**1370**	**87**
LM25UU	**6**	**LM25UUOP**	**5**	LM25UUAJ	6	**25**	**40**	**59**	**41**	**1.85**	**38**	**2**	**12**	**50**	**980**	**1560**	**220**
LM30UU	**6**	**LM30UUOP**	**5**	LM30UUAJ	6	**30**	**45**	**64**	**44.5**	**1.85**	**43**	**2.5**	**15**	**50**	**1560**	**2740**	**250**
LM35UU	**6**	**LM35UUOP**	**5**	LM35UUAJ	**6**	**35**	**52**	**70**	**49.5**	**2.1**	**49**	**2.5**	**17**	**50**	**1660**	**3130**	**390**
LM40UU	**6**	**LM40UUOP**	**5**	LM40UUAJ	6	**40**	**60**	**80**	**60.5**	**2.1**	**57**	**3**	**20**	**50**	**2150**	**4010**	**585**
LM50UU	**6**	LM50UUOP	**5**	LM50UUAJ	6	**50**	**80**	**100**	**74**	**2.6**	**76.5**	**3**	**25**	**50**	**3820**	**7930**	**1580**
LM60UU	**6**	LM60UUOP	5	LM60UUAJ	6	**60**	**90**	**110**	**85**	**3.15**	**86.5**	**3**	**30**	**50**	**4700**	**9990**	**2000**

Regular stock items in bold type.

European Dimension



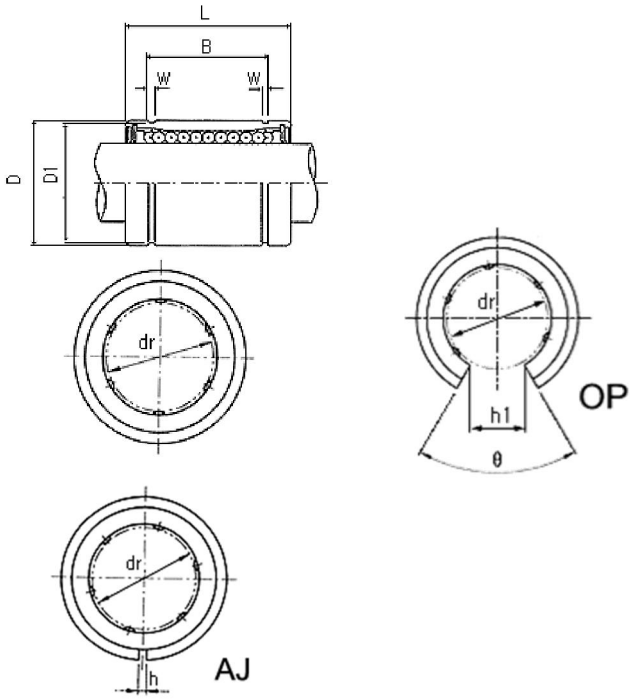

						Dimensions								Opening Angle	Dynamic Load (50km)	Static Load	Mass
Standard	# Circuits	Open	# Circuits	Adjustable	# Circuits	d	D	L	B	W	D1	h	h1	Degrees	C (N)	Co (N)	gr.
LME5UU	4			LME5UUAJ	4	5	12	22	14.5	1.1	11.5	1			200	260	12
LME8UU	**4**			LME8UUAJ	4	**8**	**16**	**25**	**16.5**	**1.1**	**15.2**	**1**			**260**	**400**	**20**
LME12UU	**4**	LME12UUOP	3	LME12UUAJ	4	**12**	**22**	**32**	**22.9**	**1.3**	**21**	**1.5**	**7.5**	**78**	**410**	**590**	**41**
LME16UU	**5**	LME16UUOP	4	**LME16UUAJ**	5	**16**	**26**	**36**	**24.9**	**1.3**	**24.9**	**1.5**	**10**	**78**	**770**	**1170**	**57**
LME20UU	**5**	LME20UUOP	4	LME20UUAJ	5	**20**	**32**	**45**	**31.5**	**1.6**	**30.3**	**2**	**10**	**60**	**860**	**1370**	**91**
LME25UU	**6**	LME25UUOP	5	LME25UUAJ	6	**25**	**40**	**58**	**44.1**	**1.85**	**37.5**	**2**	**12.5**	**60**	**980**	**1560**	**215**
LME30UU	**6**	LME30UUOP	5	**LME30UUAJ**	6	**30**	**47**	**68**	**52.1**	**1.85**	**44.5**	**2**	**12.5**	**50**	**1560**	**2740**	**325**
LME40UU	**6**	LME40UUOP	5	**LME40UUAJ**	6	**40**	**62**	**80**	**60.6**	**2.15**	**59**	**3**	**16.8**	**50**	**2150**	**4010**	**705**
LME50UU	**6**	LME50UUOP	5	LME50UUAJ	6	**50**	**75**	**100**	**77.6**	**2.65**	**72**	**3**	**21**	**50**	**3820**	**7930**	**1130**
LME60UU	**6**	LME60UUOP	5	LME60UUAJ	6	**60**	**90**	**125**	**101.7**	**3.15**	**86.5**	**3**	**27.2**	**54**	**4700**	**9990**	**2220**

Regular stock items in bold type.

Japanese Long



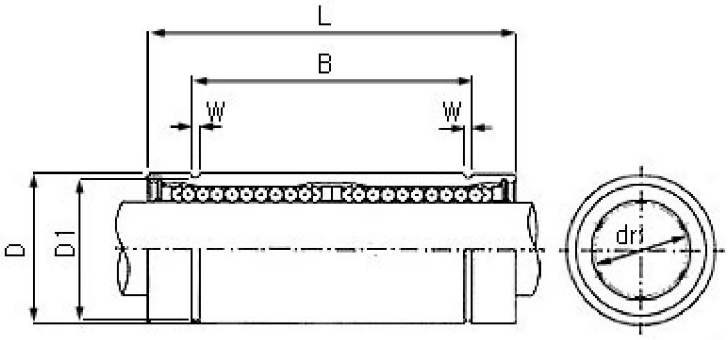

		Dimensions						Dynamic Load (50km)	Static Load	Mass
	# Circuits	d	D	L	B	W	D1	C (N)	Co (N)	gr.
LM6LUU	**4**	**6**	**12**	**35**	**27**	**1.1**	**11.5**	**320**	**520**	**16**
LM8LUU	**4**	**8**	**15**	**45**	**35**	**1.1**	**14.3**	**430**	**780**	**31**
LM10LUU	**4**	**10**	**19**	**55**	**44**	**1.3**	**18**	**580**	**1100**	**62**
LM12LUU	**4**	**12**	**21**	**57**	**46**	**1.3**	**20**	**650**	**1200**	**80**
LM13LUU	4	13	23	61	46	1.3	22	810	1570	90
LM16LUU	5	16	28	70	53	1.6	27	1230	2350	145
LM20LUU	**5**	**20**	**32**	**80**	**61**	**1.6**	**30.5**	**1400**	**2750**	**180**
LM25LUU	**6**	**25**	**40**	**112**	**82**	**1.85**	**38**	**1560**	**3140**	**440**
LM30LUU	**6**	**30**	**45**	**123**	**89**	**1.85**	**43**	**2490**	**5490**	**580**
LM35LUU	6	35	52	135	99	2.1	49	2650	6470	795
LM40LUU	6	40	60	154	121	2.1	57	3430	8040	1170
LM50LUU	6	50	80	192	148	2.6	76.5	6080	15900	3100
LM60LUU	6	60	90	211	170	3.15	86.5	7650	20000	3500

European Long

		Dimensions						Dynamic Load (50km)	Static Load	Mass
	# Circuits	d	D	L	B	W	D1	C (N)	Co (N)	gr.
LME8LUU	4	8	16	45	33	1.1	15.2	430	780	31
LME12LUU	4	12	22	57	45.8	1.3	21	650	1200	80
LME16LUU	**5**	**16**	**26**	**70**	**49.8**	**1.3**	**24.9**	**1230**	**2350**	**145**
LME20LUU	5	20	32	80	61	1.6	30.3	1400	2750	180
LME25LUU	6	25	40	112	82	1.85	38	1560	3140	440
LME30LUU	6	30	47	123	104.2	1.85	44.5	2490	5490	580
LME40LUU	6	40	62	154	121.2	2.15	59	3430	8040	1170
LME50LUU	6	50	75	192	155.2	2.65	72	6080	15900	3100
LME60LUU	6	60	90	211	170	3.15	86.5	7650	20000	3500

20, 25 and 60 sizes are identical to Japanese version.

Ultra slim - KH series

Constructed with a pressed metal case for ultra-compact dimensions but still comes complete with seals..



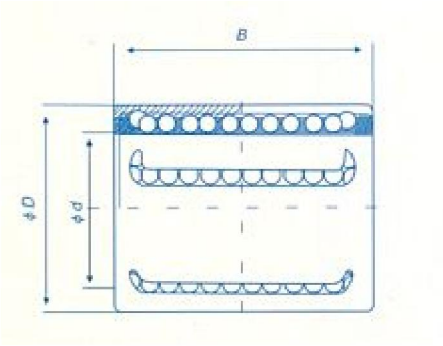

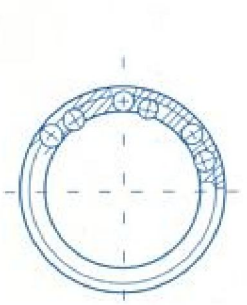

	Dimensions			Dynamic Load **(50km)**	Static Load	Mass
	d	D	B	C (N)	Co (N)	gr.
KH0622PP	6	12	22	400	239	7
KH0824PP	**8**	**15**	**24**	**435**	**280**	**12**
KH1026PP	**10**	**17**	**26**	**500**	**370**	**14.5**
KH1228PP	**12**	**19**	**28**	**620**	**510**	**18.5**
KH1428PP	**14**	**21**	**28**	**620**	**520**	**20.5**
KH1630PP	**16**	**24**	**30**	**800**	**620**	**27.5**
KH2030PP	**20**	**28**	**30**	**950**	**790**	**32.5**
KH2540PP	**25**	**35**	**40**	**1990**	**1670**	**66**
KH3050PP	**30**	**40**	**50**	**2800**	**2700**	**95**
KH4060PP	**40**	**52**	**60**	**4400**	**4450**	**182**
KH5070PP	**50**	**62**	**70**	**5500**	**6300**	**252**

Regular stock items in bold type.



Also available in stock are corrosion resistant versions with engineering plastic body, nickel coated bearing plates and stainless steel balls.

Japanese Flanged



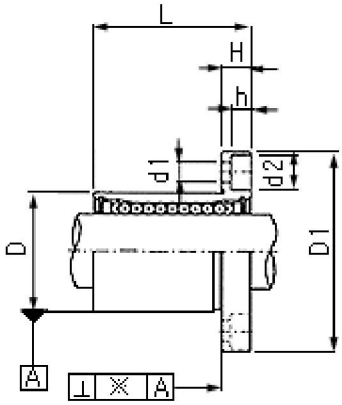

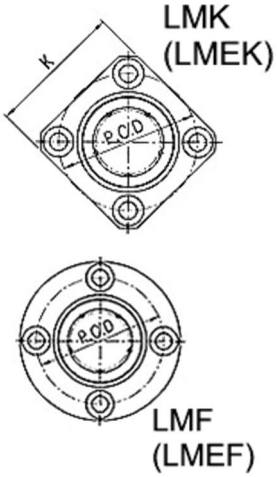

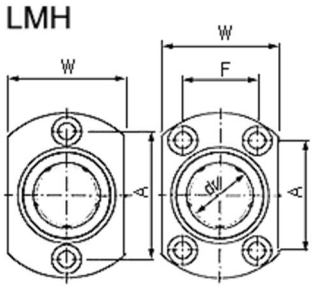

Type				Dimensions											Dynamic Load (50km)	Static Load	Mass
Circular	Square	Oval	# Circuits	d	D	L	D1	H	PCD	K	W	A	F	d1xd2xh	C (N)	Co (N)	gr.
LMF6UU	**LMK6UU**	LMH6UU	4	6	12	19	28	5	20	22	18	20		3.4x6.5x3.3	200	260	26.5
LMF8SUU	LMK8SUU		4	8	15	17	32	5	24	25				3.4x6.5x3.3	170	220	34
LMF8UU	LMK8UU	LMH8UU	**4**	**8**	**15**	**24**	**32**	**5**	**24**	**25**	**21**	**24**		**3.4x6.5x3.3**	**260**	**400**	**40**
LMF10UU	LMK10UU	LMH10UU	**4**	**10**	**19**	**29**	**40**	**6**	**29**	**30**	**25**	**29**		**4.5x8x4.4**	**370**	**540**	**78**
LMF12UU	**LMK12UU**	LMH12UU	**4**	**12**	**21**	**30**	**42**	**6**	**32**	**32**	**27**	**32**		**4.5x8x4.4**	**410**	**590**	**76**
LMF13UU	LMK13UU	LMH13UU	4	13	23	32	43	6	33	34	29	33		4.5x8x4.4	500	770	94
LMF16UU	**LMK16UU**	**LMH16UU**	**5**	**16**	**28**	**37**	**48**	**6**	**38**	**37**	**34**	**31**	**22**	**4.5x8x4.4**	**770**	**1170**	**134**
LMF20UU	**LMK20UU**	**LMH20UU**	**5**	**20**	**32**	**42**	**54**	**8**	**43**	**42**	**38**	**36**	**24**	**5.5x9.5x5.4**	**860**	**1370**	**180**
LMF25UU	**LMK25UU**	**LMH25UU**	**6**	**25**	**40**	**59**	**62**	**8**	**51**	**50**	**46**	**40**	**32**	**5.5x9.5x5.4**	**980**	**1560**	**340**
LMF30UU	**LMK30UU**	LMH30UU	**6**	**30**	**45**	**64**	**74**	**10**	**60**	**58**	**51**	**49**	**35**	**6.6x11x6.5**	**1560**	**2740**	**460**
LMF35UU	LMK35UU		6	35	52	70	82	10	67	64				6.6x11x6.5	1660	3130	795
LMF40UU	**LMK40UU**		**6**	**40**	**60**	**80**	**96**	**13**	**78**	**75**				**9x14x8.6**	**2150**	**4010**	**1054**
LMF50UU	**LMK50UU**		6	50	80	100	116	13	98	92				9x14x8.6	3820	7930	2200
LMF60UU	LMK60UU		6	60	90	110	134	18	112	106				11x17.5x10.8	4700	9990	2960

Regular stock items in bold type.

Japanese Flanged Long



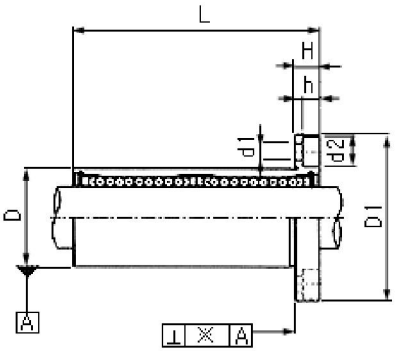

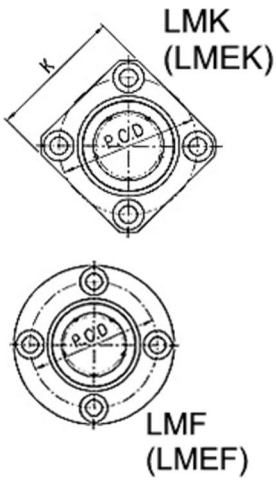

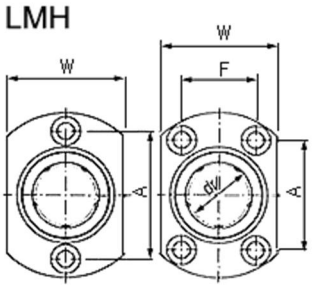

Type				Dimensions											Dynamic Load (50km)	Static Load	Mass
Circular	Square	Oval	# Circuits	d	D	L	D1	H	PCD	K	W	A	F	d1xd2xh	C (N)	Co (N)	gr.
LMF6LUU	**LMK6LUU**	LMH6LUU	4	6	12	35	28	5	20	22	18	20		3.4x6.5x3.3	320	520	31
LMF8LUU	**LMK8LUU**	LMH8LUU	4	8	15	45	32	5	24	25	21	24		3.4x6.5x3.3	430	780	53
LMF10LUU	**LMK10LUU**	LMH10LUU	4	10	19	55	40	6	29	30	25	29		4.5x8x4.4	580	1100	105
LMF12LUU	**LMK12LUU**	LMH12LUU	**4**	**12**	**21**	**57**	**42**	**6**	**32**	**32**	**27**	**32**		**4.5x8x4.4**	**650**	**1200**	**100**
LMF13LUU	LMK13LUU	LMH13LUU	4	13	23	61	43	6	33	34	29	33		4.5x8x4.4	810	1570	130
LMF16LUU	**LMK16LUU**	LMH16LUU	**5**	**16**	**28**	**70**	**48**	**6**	**38**	**37**	**34**	**31**	**22**	**4.5x8x4.4**	**1230**	**2350**	**187**
LMF20LUU	**LMK20LUU**	**LMH20LUU**	**5**	**20**	**32**	**80**	**54**	**8**	**43**	**42**	**38**	**36**	**24**	**5.5x9.5x5.4**	**1400**	**2750**	**260**
LMF25LUU	**LMK25LUU**	LMH25LUU	**6**	**25**	**40**	**112**	**62**	**8**	**51**	**50**	**46**	**40**	**32**	**5.5x9.5x5.4**	**1560**	**3140**	**515**
LMF30LUU	**LMK30LUU**	LMH30LUU	**6**	**30**	**45**	**123**	**74**	**10**	**60**	**58**	**51**	**49**	**35**	**6.6x11x6.5**	**2490**	**5490**	**655**
LMF35LUU	**LMK35LUU**		6	35	52	135	82	10	67	64				6.6x11x6.5	2650	6470	970
LMF40LUU	**LMK40LUU**		**6**	**40**	**60**	**154**	**96**	**13**	**78**	**75**				**9x14x8.6**	**3430**	**8040**	**1560**
LMF50LUU	**LMK50LUU**		6	50	80	192	116	13	98	92				9x14x8.6	6080	15900	3500
LMF60LUU	**LMK60LUU**		6	60	90	211	134	18	112	106				11x17.5x10.8	7650	20000	4500

Regular stock items in bold type.

European Flanged



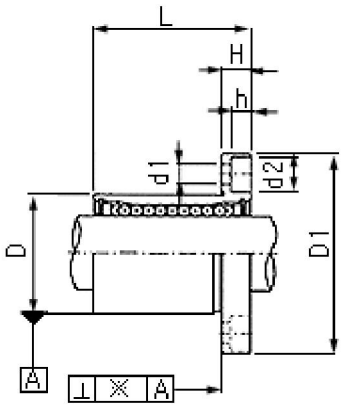

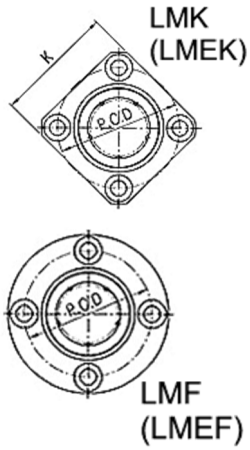

Type			Dimensions								Dynamic Load (50km)	Static Load	Mass
Circular	Square	# Circuits	d	D	L	D1	H	PCD	K	d1xd2xh	C (N)	Co (N)	gr.
LMEF8UU	LMEK8UU	4	8	16	25	32	5	24	25	3.4x6.5x3.3	260	400	44
LMEF12UU	LMEK12UU	4	12	22	32	42	6	32	32	4.5x8x4.4	410	590	86
LMEF16UU	LMEK16UU	5	16	26	36	46	6	36	35	4.5x8x4.4	770	1170	120
LMEF20UU	LMEK20UU	5	20	32	45	54	8	43	42	5.5x9.5x5.4	860	1370	184
LMEF25UU	LMEK25UU	6	25	40	58	62	8	51	50	5.5x9.5x5.4	980	1560	335
LMEF30UU	LMEK30UU	6	30	47	68	76	10	62	60	6.6x11x6.5	1560	2740	545
LMEF40UU	LMEK40UU	6	40	62	80	98	13	80	75	9x14x8.6	2150	4010	1185
LMEF50UU	LMEK50UU	6	50	75	100	112	13	94	88	9x14x8.6	3820	7930	1730
LMEF60UU	LMEK60UU	6	60	90	125	134	18	112	106	11x17.5x10.8	4700	9990	3180

European Flanged Long



Type			Dimensions								Dynamic Load (50km)	Static Load	Mass
Circular	Square	# Circuits	d	D	L	D1	H	PCD	K	d1xd2xh	C (N)	Co (N)	gr.
LMEF8LUU	LMEK8LUU	4	8	16	45	32	5	24	25	3.4x6.5x3.3	430	780	53
LMEF12LUU	LMEK12LUU	4	12	22	57	42	6	32	32	4.5x8x4.4	650	1200	100
LMEF16LUU	LMEK16LUU	5	16	26	70	46	6	36	35	4.5x8x4.4	1230	2350	187
LMEF20LUU	LMEK20LUU	5	20	32	80	54	8	43	42	5.5x9.5x5.4	1400	2750	260
LMEF25LUU	LMEK25LUU	6	25	40	112	62	8	51	50	5.5x9.5x5.4	1560	3140	515
LMEF30LUU	LMEK30LUU	6	30	47	123	76	10	62	60	6.6x11x6.5	2490	5490	655
LMEF40LUU	LMEK40LUU	6	40	62	154	98	13	80	75	9x14x8.6	3430	8040	1560
LMEF50LUU	LMEK50LUU	6	50	75	192	112	13	94	88	9x14x8.6	6080	15900	3500
LMEF60LUU	LMEK60LUU	6	60	90	211	134	18	112	106	11x17.5x10.8	7650	20000	4500

Super ball – Long life self-aligning

These types are dimensionally equivalent to LME series bushes. Load is carried from the shaft through the balls and onto crowned, hardened load bearing inserts. The inserts, return tubes and end seals and encapsulated in an engineering plastic frame.



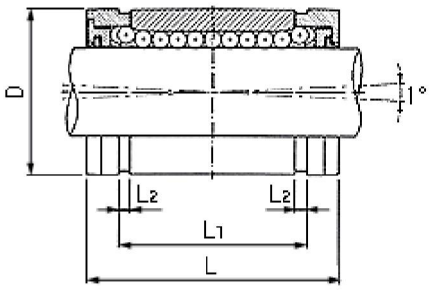

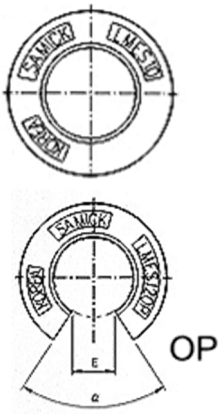

		Dimensions					Dynamic Load (50km)	Static Load	Mass
	# Circuits	d	D	L	L1	L2	C (N)	Co (N)	gr.
LMES10UU	**5**	**10**	**19**	**29**	**21.7**	**1.35**	**750**	**550**	**17**
LMES12UU	**5**	**12**	**22**	**32**	**22.7**	**1.35**	**1230**	**1100**	**23**
LMES16UU	**5**	**16**	**26**	**36**	**24.7**	**1.35**	**1550**	**1250**	**28**
LMES20UU	**6**	**20**	**32**	**45**	**31.3**	**1.65**	**2580**	**1670**	**61**
LMES25UU	**6**	**25**	**40**	**58**	**43.8**	**1.9**	**3800**	**2750**	**122**
LMES30UU	**6**	**30**	**47**	**68**	**51.8**	**1.9**	**4710**	**2800**	**185**
LMES40UU	**6**	**40**	**62**	**80**	**60.4**	**2.2**	**6500**	**5720**	**360**
LMES50UU	**6**	**50**	**75**	**100**	**77.4**	**2.7**	**11460**	**7940**	**580**

Regular stock items in bold type.

Open Super ball

Open type have a pin hole to suit retaining keys of open case units.

		Dimensions					Opening Angle				Dynamic Load (50km)	Static Load	Mass
	# Circuits	d	D	L	L2	h	Degrees	F	G	J	C (N)	Co (N)	gr.
LMES12UUOP	**4**	**12**	**22**	**32**	**1.35**	**6.5**	**66**	**3**		**0.7**	**1290**	**1260**	**18**
LMES16UUOP	**4**	**16**	**26**	**36**	**1.35**	**9**	**68**	**3**		**0.7**	**1640**	**1320**	**22**
LMES20UUOP	**5**	**20**	**32**	**45**	**1.65**	**9**	**55**	**3**		**0.9**	**2630**	**1720**	**51**
LMES25UUOP	**5**	**25**	**40**	**58**	**1.9**	**11.5**	**57**	**3**	**1.5**	**1.4**	**3910**	**2850**	**102**
LMES30UUOP	**5**	**30**	**47**	**68**	**1.9**	**14**	**57**	**3**	**2**	**2.2**	**4850**	**2900**	**155**
LMES40UUOP	**5**	**40**	**62**	**80**	**2.2**	**19.5**	**56**	**3**	**1.5**	**2.7**	**6700**	**5900**	**300**
LMES50UUOP	**5**	**50**	**75**	**100**	**2.7**	**22.5**	**54**	**3**	**2.5**	**2.3**	**11700**	**8100**	**480**

Regular stock items in bold type.

Imperial Super Ball – Long life self-aligning



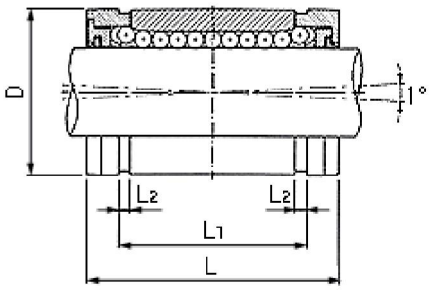

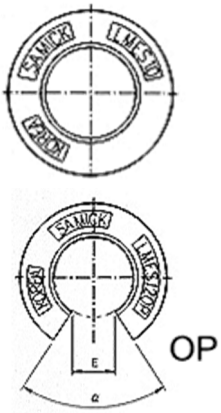

		Dimensions					Dynamic Load (50km)	Static Load	Mass
	# Circuits	d	D	L	L1	L2	C (lbf)	Co (lbf)	gr.
LMBS4UU	4	1/4"	1/2"	3/4"	0.511/0.501"	0.039"	57	49	4.536
LMBS6UU	4	3/8"	5/8"	7/8"	0.699/0.689"	0.039"	78	66	9.072
LMBS8UU	4	1/2"	7/8"	1-1/4"	1.032/1.012"	0.05"	190	190	22.68
LMBS10UU	5	5/8"	1-1/8"	1-1/2"	1.105/1.095"	0.056"	290	340	36.29
LMBS12UU	6	3/4"	1-1/4"	1-5/8"	1.270/1.250"	0.056"	500	430	63.5
LMBS16UU	6	1"	1-9/16"	2-1/4"	1.884/1.864"	0.07"	820	780	131.5
LMBS20UU	6	1-1/4"	2"	2-5/8"	2.004/1.984"	0.068"	1240	1270	181.4
LMBS24UU	6	1-1/2"	2-3/8"	3"	2.410/2.390"	0.086"	1510	1540	362.9
LMBS32UU	6	2	3"	4"	3.193/3.163"	0.105"	2230	2580	626

Regular stock items in bold type

Imperial Open Super Ball

Open type have a pin hole to suit retaining keys of open case units.

							Opening Angle				Dynamic Load (50km)	Static Load	Mass
	# Circuits	d	D	L	L2	h	Degrees	F	G	J	C (lbf)	Co (lgf)	gr.
LMBS8UUOP	3	1/2"	7/8"	1-1/4"	0.05"	0.32"	30	0.14"	0.63"	Thru	210	190	13.61
LMBS10UUOP	4	5/8"	1-1/8"	1-1/2"	0.056"	0.38"	30	0.11"	0.13"	0.039"	320	340	27.22
LMBS12UUOP	5	3/4"	1-1/4"	1-5/8"	0.056"	0.43"	30	0.14"	0.13"	0.059"	510	430	49.9
LMBS16UUOP	5	1"	1-9/16"	2-1/4"	0.07"	0.56"	30	0.14"	0.13"	0.047"	830	780	95.25
LMBS20UUOP	5	1-1/4"	2"	2-5/8"	0.068"	0.63"	30	0.2"	0.19"	0.09"	1250	1270	158.8
LMBS24UUOP	5	1-1/2"	2-3/8"	3"	0.086"	0.75"	30	0.2"	0.19"	0.09"	1520	1540	303.9
LMBS32UUOP	5	2	3"	4"	0.105"	1.00"	30	0.27"	0.31"	Thru	2250	2580	499

Regular stock items in bold type.

1 lbf = 4.448N

European Housing







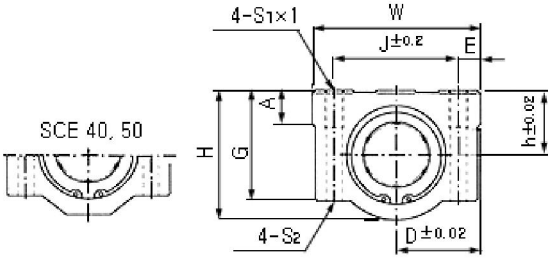

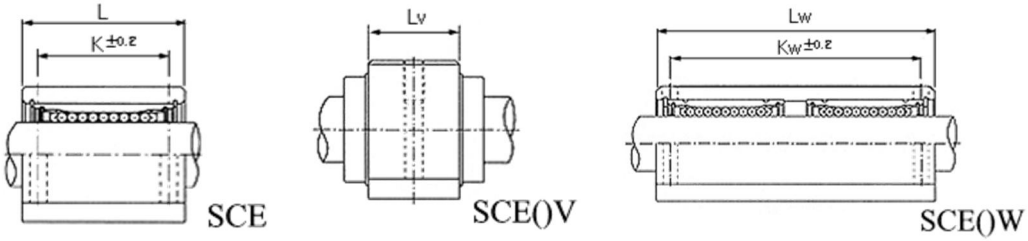

	Standard			Wide				Short			Dimensions										
	K	L	Mass (gr)		Kw	Lw	mass		Lv	Mass	d	h	D	W	H	G	A	J	E	S1xl	S2
SCE8	**18**	**30**	**36**	**SCE8W**	**42**	**58**	**58**	**SCE8V**	**14.4**	**20**	**8**	**11**	**17**	**34**	**22**	**18**	**6**	**24**	**5**	**M4x8**	**3.4**
SC10	**21**	**35**	**60**	**SC10W**	**46**	**68**	**87**	SC10V	19.5	33	**10**	**13**	**20**	**40**	**26**	**21**	**8**	**28**	**6**	**M5x10**	**4.3**
SCE12	**26**	**39**	**77**	**SCE12W**	**64**	**77**	**150**	SCE12V	20.3	41	**12**	**15**	**22**	**44**	**30**	**24.5**	**8**	**33**	**5.5**	**M5x10**	**4.3**
SCE16	**34**	**44**	**123**	**SCE16W**	**79**	**89**	**246**	SCE16V	22.3	65	**16**	**19**	**25**	**50**	**38.5**	**32.5**	**9**	**36**	**7**	**M5x12**	**4.3**
SCE20	**40**	**53**	**154**	**SCE20W**	**90**	**106**	**308**	SCE20V	28.3	85	**20**	**21**	**27**	**54**	**41**	**35**	**11**	**40**	**7**	**M6x12**	**5.2**
SCE25	**50**	**67**	**335**	**SCE25W**	**119**	**136**	**670**	SCE25V	40.4	185	**25**	**26**	**38**	**76**	**51.5**	**41**	**12**	**54**	**11**	**M8x18**	**6.8**
SCE30	**58**	**76**	**435**	**SCE30W**	**132**	**154**	**875**	SCE30V	48.4	245	**30**	**30**	**39**	**78**	**59.5**	**49**	**15**	**58**	**10**	**M8x18**	**6.8**
SCE40	**60**	**90**	**995**	SCE40W	150	180	1990	SCE40V	56.4	615	**40**	**40**	**51**	**102**	**78**	**62**	**20**	**80**	**11**	**M10x25**	**8.6**
SCE50	**80**	**110**	**1820**	SCE50W	200	230	3660	SCE50V	72.3	770	**50**	**52**	**61**	**122**	**102**	**80**	**24**	**100**	**11**	**M10x25**	**8.6**

Regular stock items in bold type.

Housing for Japanese bushes are available on indent.
All data is for housings without bushes.
Can be assembled with Simplicity plain bush, Super ball or standard ball bushes.

Block Type Shaft Support



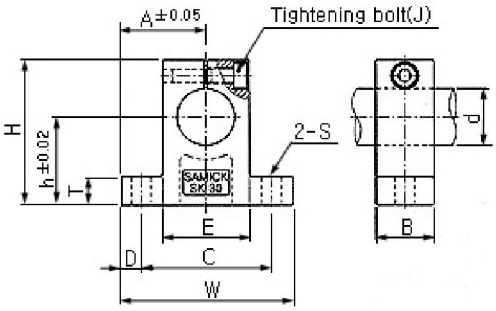

	Dimensions												Mass
	d	h	A	W	H	T	E	D	C	B	S	J	gr.
SK8	8	20	21	42	32.8	6	18	5	32	14	5.5	M4	24
SK10	**10**	**20**	**21**	**42**	**32.8**	**6**	**18**	**5**	**32**	**14**	**5.5**	**M4**	**24**
SK12	**12**	**23**	**21**	**42**	**38**	**6**	**20**	**5**	**32**	**14**	**5.5**	**M4**	**30**
SK13	13	23	21	42	38	6	20	5	32	14	5.5	M4	30
SK16	**16**	**27**	**24**	**48**	**44**	**8**	**25**	**5**	**38**	**16**	**5.5**	**M4**	**40**
SK20	**20**	**31**	**30**	**60**	**51**	**10**	**30**	**7.5**	**45**	**20**	**6.6**	**M5**	**70**
SK25	**25**	**35**	**35**	**70**	**60**	**12**	**38**	**7**	**56**	**24**	**6.6**	**M6**	**130**
SK30	**30**	**42**	**42**	**84**	**70**	**12**	**44**	**10**	**64**	**28**	**9**	**M6**	**180**
SK35	**35**	**50**	**49**	**98**	**85**	**15**	**50**	**12**	**74**	**32**	**11**	**M8**	**270**
SK40	**40**	**60**	**57**	**114**	**96**	**15**	**60**	**12**	**90**	**36**	**11**	**M8**	**420**

Regular stock items in bold type.

Flanged Type Shaft Support



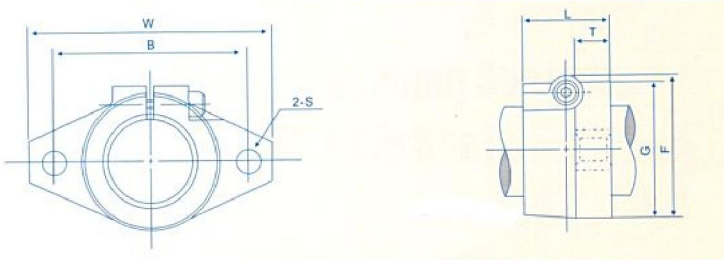

	Dimensions								Adjusting Bolt	Mass
	d	W	L	T	F	G	B	S	Size	gr.
SHF10	**10**	**43**	**10**	**5**	**24**	**20**	**32**	**5.5**	**M4**	**13**
SHF12	**12**	**47**	**13**	**7**	**28**	**25**	**36**	**5.5**	**M4**	**20**
SHF13	13	47	13	7	28	25	36	5.5	M4	20
SHF16	**16**	**50**	**16**	**8**	**31**	**28**	**40**	**5.5**	**M4**	**27**
SHF20	**20**	**60**	**20**	**8**	**37**	**34**	**48**	**7**	**M5**	**40**
SHF25	**25**	**70**	**25**	**10**	**42**	**40**	**56**	**7**	**M5**	**60**
SHF30	**30**	**80**	**30**	**12**	**50**	**46**	**64**	**9**	**M6**	**110**
SHF35	**35**	**92**	**35**	**14**	**58**	**50**	**72**	**12**	**M8**	**380**
SHF40	**40**	**102**	**40**	**16**	**67**	**56**	**80**	**12**	**M10**	**510**

Regular stock items in bold type.

Hardened ground shafts

Linear shafting is suitable for most linear guide applications including pneumatic or hydraulic cylinder rods. Most sizes from 10 to 60mm are available in 3m maximum length and can be cut to required lengths. Shafts are made for linear applications and not manufactured to a roundness tolerance.



Bearing steel shafts

- MaterialSUJ 2 bearing steel
- Chrome plated to 0.5-1.0μm
- Sizes from 5 to 60 from stock
- Induction hardened to H_rC 55°-64°
- Shaft tolerance g6
- Surface roughness less than 1.5s

Type	Dia	Max length	Max Stocked length	Effective case hardened depth	Weight
	mm	mm	mm	mm	kg/m
SFC3	3	400		>0.5	0.06
SFC4	**4**	**1000**	**1000**	**>0.5**	**0.1**
SFC5	**5**	**1000**		**>0.5**	**0.16**
SFC6	**6**	**1000**	**1000**	**>0.5**	**0.23**
SFC8	**8**	**2000**	**2000**	**>0.5**	**0.4**
SFC10	**10**	**2000**	**2000**	**>1.0**	**0.62**
SFC12	**12**	**3000**	**3000**	**>1.0**	**0.89**
SFC13	**13**	**3500**	**3500**	**>1.0**	**1.04**
SFC16	**16**	**6000**	**3000**	**>1.0**	**1.58**
SFC20	**20**	**6000**	**3000**	**>1.5**	**2.47**
SFC25	**25**	**6000**	**3000**	**>1.5**	**3.85**
SFC30	**30**	**6000**	**3000**	**>2.0**	**5.55**
SFC35	**35**	**6000**	**3000**	**>2.0**	**7.55**
SFC40	**40**	**6000**	**3000**	**>2.0**	**9.87**
SFC50	**50**	**6000**	**3000**	**>2.5**	**15.4**
SFC60	**60**	**6000**	**3000**	**>2.5**	**22.2**
SFC80	80	6000		>2.5	39.5
SFC100	100	6000		>3.0	61.7
SFC120	120	6000		>3.0	88.8
SFC150	150	6000		>3.0	139

Type	Dia	Max length	Effective case hardened depth	Weight
	mm	mm	mm	kg/m
SFC1/4"	**6.35**	**1000**	**>0.5**	**0.25**
SFC3/8"	**9.525**	**2000**	**>1.0**	**0.56**
SFC1/2"	**12.7**	**3000**	**>1.0**	**0.99**
SFC5/8"	**15.875**	**3000**	**>1.0**	**1.55**
SFC3/4"	**19.05**	**3000**	**>1.5**	**2.24**
SFC1"	**25.4**	**3000**	**>1.5**	**3.98**
SFC1-1/4"	**31.75**	**3000**	**>2.0**	**6.22**
SFC1-1/2"	**38.1**	**3000**	**>2.0**	**8.95**
SFC2"	50.8	3000	>2.0	15.81

Regular stock items in bold type.

Stainless steel shafts

- Material SUS 440C
- Sizes from 6 to 40 from stock
- Imperial sizes also available on request
- Induction hardened to H_rC 60°-64°
- Shaft tolerance f6
- Surface roughness less than 1.5s

Type	Dia	Max length	Max stocked length	Effective case hardened depth	Weight
	mm	mm	mm	mm	kg/m
SS6	**6**	**1000**	**1000**	**>0.5**	**0.22**
SS8	**8**	**1000**	**1000**	**>0.5**	**0.39**
SS10	**10**	**2000**	**2000**	**>1.0**	**0.61**
SS12	**12**	**2000**	**2000**	**>1.0**	**0.88**
SS13	13	4000		>1.0	1.03
SS16	**16**	**5000**	**3000**	**>1.0**	**1.56**
SS20	**20**	**6000**	**3000**	**>1.5**	**2.43**
SS25	**25**	**6000**	**3000**	**>1.5**	**3.8**
SS30	**30**	**6000**	**3000**	**>2.0**	**5.48**
SS35	35	6000		>2.0	7.23
SS40	**40**	**6000**	**3000**	**>2.0**	**9.44**
SS50	50	6000		>2.5	15.2

Regular stock items in bold type.

Support rail

Support rail components and assemblies can also be supplied. In practice this type of solutions severely reduces load capacities and is susceptible to environment contamination. For new applications rail solutions such as compact rail and LM profile rail are recommended.

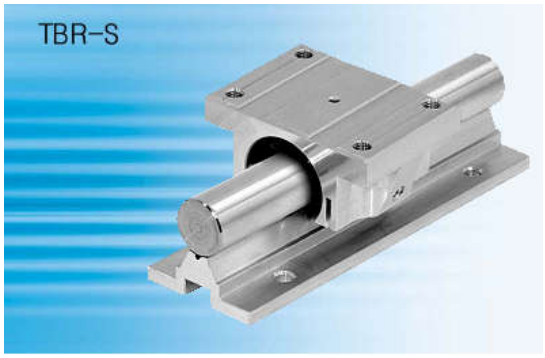

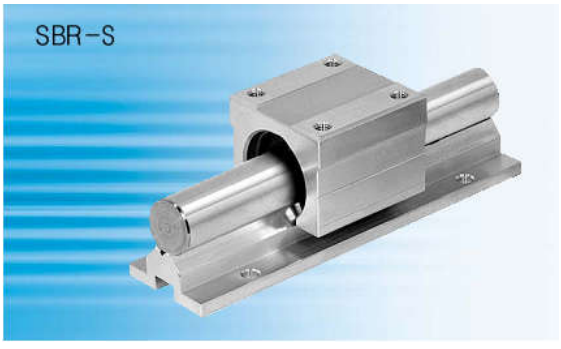

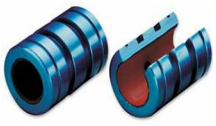

Simplicity Self-Lubricating Plain Bushes

Simplicity bushes have a unique Teflon composite liner called Frelon. When combined with their anodised aluminium shell they offer 20 times the load capacity, up to 270 times the life expectancy and can run at up to 20 times the speed of a ball bush. This massive load capacity is also combined with a bearing that won't catastrophically fail and makes simplicity ideal for critical applications where downtime can be highly expensive. Simplicity bushes can also be used in rotary or combined linear rotary applications.

The self-lubricating liner makes them virtually maintenance free. Frelon can embed particulates into the liner itself, protecting the shaft and bearing from damage in dirty environments. These bearings have a wide temperature range of –240 to +260degC. Special liner types can also be specified that can run on aluminium or 316 shafting and in wet applications. They have a wide-ranging chemical resistance and certain liner types can be run in submerged applications. 316 stainless shells are also an option for aggressive chemical applications.

Simplicity is dimensionally interchangeable with standard ball bushes and available in imperial, Asian and European metric series. An existing ball bush application can easily be retro fitted with a self-lubricating simplicity bush without machining or reworking of the machine. The Frelon liners can also be applied to many different forms including flanged and press fit sleave bushes and guideways or even custom parts.

Standard simplicity bushes have a precision fit that offers similar rigidity to a preloaded ball bush. This also allows the bush to wipe the shaft virtually clean with every stroke. For parallel shaft applications a larger internal clearance, "compensated" type is recommended as this reduces binding that can occur in parallel shaft applications. For severe misalignment a self-aligning bush with a crowned outer that allows the bush to float within a standard housing can give even greater tolerance of misalignment and eccentricity.





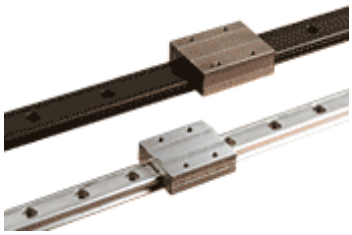

The surface finish of the shafts must be between 8-16RMS. Too rough a shaft will cause excessive liner wear and too smooth a finish will inhibit Teflon transfer from the bush the shaft. Hardened and ground chrome, SS or standard linear shafts are recommended. As the bush transfers Teflon to the shaft excessive cleaning can cause increased wear of the bushes. The bushes can be run without lubrication but a 3 in 1 type oil especially at commissioning is recommended. Do not use spray on oils, grease or PTFE sprays with simplicity. Avoid canter levered loads greater than 2:1, mass offset to bush spacing, as this will cause plain bushes to bind up.

Pacific bearing
Smooth & Quiet Linear Motion™

simplicity™



simplicity™

Metric Sizes – Dimensionally equivalent to LME series ball bush

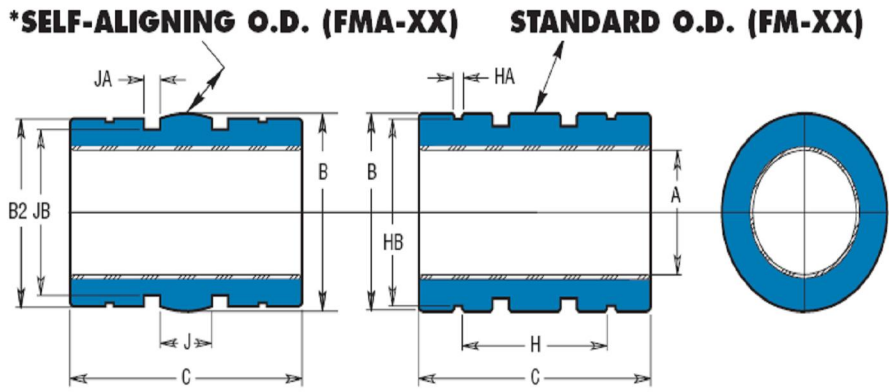

PRECISION I.D. SERIES Similar to preloaded ball bearing				COMPENSATED I.D. SERIES Similar to standard ball bearing			Standard		SELF-ALIGNING						
Part No.	Nominal Size	A Bearing I.D. (F8)		Part No.	A Bearing I.D.		B O.D. (h7)		B2 O.D.			C Length		Concentric	Bearing Weight
Closed	mm	Min.	Max.	Closed	Min.	Max.	Min.	Max.	Min.	Min.	Max.	Min.	Max.	Max.	(kg.)
FM 05	5	5.01	5.028	FMC 05	5.06	5.078	11.982	12	FMA05	11.941	11.966	21.746	22	0.0254	0.004
FM 08	**8**	**8.013**	**8.035**	FMC 08	8.063	8.085	15.982	16	FMA08	15.941	15.966	**24.746**	**25**	**0.0254**	**0.009**
FM 10	**10**	**10.013**	**10.035**	FMC 10	10.063	10.085	18.979	19	**FMA10**	**18.94**	**18.964**	**28.746**	**29**	**0.0254**	**0.014**
FM 12	**12**	**12.016**	**12.043**	**FMC 12**	**12.066**	**12.093**	21.979	22	**FMA12**	**21.94**	**21.963**	**31.746**	**32**	**0.0254**	**0.017**
FM 16	**16**	**16.016**	**16.043**	**FMC 16**	**16.066**	**16.093**	25.979	26	**FMA16**	**25.94**	**25.964**	**35.746**	**36**	**0.0254**	**0.028**
FM 20	**20**	**20.02**	**20.053**	**FMC 20**	**20.096**	**20.129**	31.975	32	**FMA20**	**31.94**	**31.963**	**44.746**	**45**	**0.0254**	**0.054**
FM 25	**25**	**25.02**	**25.053**	**FMC 25**	**25.096**	**25.129**	39.975	40	**FMA25**	**39.94**	**39.962**	**57.746**	**58**	**0.0254**	**0.109**
FM 30	**30**	**30.02**	**30.053**	**FMC 30**	**30.096**	**30.129**	46.975	47	**FMA30**	**46.94**	**46.962**	**67.746**	**68**	**0.0254**	**0.176**
FM 40	**40**	**40.025**	**40.064**	**FMC 40**	**40.127**	**40.166**	61.97	62	FMA40	61.935	61.961	**79.746**	**80**	**0.0254**	**0.356**
FM 50	**50**	**50.025**	**50.064**	**FMC 50**	**50.127**	**50.166**	74.97	75	FMA50	74.935	74.96	**99.746**	**100**	**0.0254**	**0.628**
FM 60	**60**	**60.03**	**60.076**	FMC 60	60.182	60.228	89.965	90	FMA60	89.931	89.957	**124.492**	**125**	**0.038**	**1.117**
FM 80	80	80.03	80.076	FMC 80	80.182	80.228	119.97	120	FMA80	119.931	119.957	164.492	165	0.051	2.679

Normal stock items in bold type

Load data

PART NO.	Effective surface area (SQ. CM)	Max. Static Load (kg) GOLD	Max. Static Load (kg) F & J
FM 05	1.1	232	116
FM 08	2	420	210
FM 10	2.9	610	305
FM 12	3.8	806	403
FM 16	5.8	1210	605
FM 20	9	1890	945
FM 25	14.5	3046	1523
FM 30	20.4	4284	2142
FM 40	32	6720	3360
FM 50	50	10500	5250
FM 60	75	15750	7875
FM 80	132	27720	13860

Max PV (m/min.kg/sq.cm)
Frelon Gold 430
F&J 215

Max Speed m/min (dry)
Frelon Gold 91.4
F&J 42.6

Max Speed m/min (lubed)
Frelon Gold 251.5
F&J 122



1kg = 9.8N

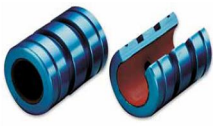

Thin walled – Dimensionally equivalent to KH series ball bush

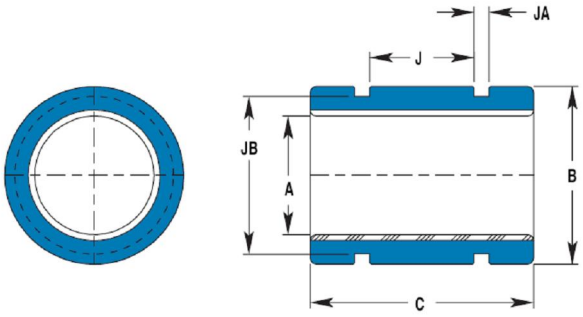

PRECISION I.D. SERIES Similar to preloaded ball bearing				COMPENSATED I.D. SERIES Similar to standard ball bearing								
Part No.	Nominal Size	A Bearing I.D. (F8)		Part No.	A Bearing I.D.		B O.D. (h7)		C Length (h13)		Concentric	Bearing Weight
	mm	Min.	Max.	Closed	Min.	Max.	**Min.**	**Max.**	**Min.**	**Max.**	**Max.**	**(kg.)**
FMT 06	**6**	**6.01**	**6.028**	FMTC 06	6.06	6.078	**11.982**	**12**	**21.746**	**22**	**0.0254**	**0.0057**
FMT 08	8	8.013	8.035	FMTC 08	8.063	8.085	14.982	15	23.746	24	0.0254	0.0071
FMT 10	**10**	**10.013**	**10.035**	FMTC 10	10.063	10.085	**16.982**	**17**	**25.746**	**26**	**0.0254**	**0.0085**
FMT 12	**12**	**12.016**	**12.043**	FMTC 12	12.066	12.093	**18.979**	**19**	**27.746**	**28**	**0.0254**	**0.0113**
FMT 14	14	14.016	14.043	FMTC 14	14.066	14.093	20.979	21	27.746	28	0.0254	0.0128
FMT 16	**16**	**16.016**	**16.043**	FMTC 16	16.066	16.093	**23.979**	**24**	**29.746**	**30**	**0.0254**	**0.0184**
FMT 20	**20**	**20.02**	**20.053**	FMTC 20	20.096	20.129	**27.979**	**28**	**29.746**	**30**	**0.0254**	**0.0227**
FMT 25	**25**	**25.02**	**25.053**	FMTC 25	25.096	25.129	**34.975**	**35**	**39.746**	**40**	**0.0254**	**0.0439**
FMT 30	**30**	**30.02**	**30.053**	FMTC 30	30.09	30.129	**39.975**	**40**	**49.746**	**50**	**0.0254**	**0.0652**
FMT 40	**40**	**40.025**	**40.064**	FMTC 40	40.127	40.166	**51.97**	**52**	**59.746**	**60**	**0.0254**	**0.1233**
FMT 50	**50**	**50.025**	**50.064**	FMTC 50	50.127	50.166	**61.97**	**62**	**69.746**	**70**	**0.0254**	**0.1772**

Normal stock items in bold type

Load data

PART NO.	Effective surface area (SQ. CM)	Max. Static Load (kg) GOLD	Max. Static Load (kg) F & J
FMT 06	1.3	278	139
FMT 08	1.9	404	202
FMT 10	2.6	546	273
FMT 12	3.4	706	353
FMT 14	3.9	824	412
FMT 16	4.8	1008	504
FMT 20	6	1260	630
FMT 25	10	2100	1050
FMT 30	15	3150	1575
FMT 40	24	5040	2520
FMT 50	35	7350	3675

Max PV (m/min.kg/sq.cm)
Frelon Gold 430
F&J 215

Max Speed m/min (dry)
Frelon Gold 91.4
F&J 42.6

Max Speed m/min (lubed)
Frelon Gold 251.5
F&J 122



1kg = 9.8N

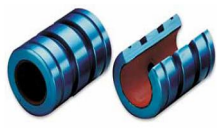

simplicity™

ISO metric sleeve bearings

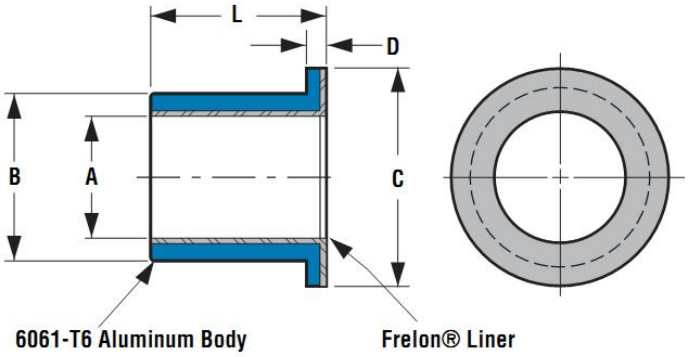

	Nominal Bearing size			A Bearing I.D		B OD		C Flange OD	D Flange Width	L Length		Max Static Load (kg)		Bearing Weight	Recommended Housing Bore			
															Slip fit and epoxy		Press Fit	
Part Number	ID	OD	Length	Min	Max	Min	Max	Max	Max	Min	Max	Gold	F & J	kg	Min	Max	Min	Max
PSFM0610-06	6	10	6	6.028	6.058	10.023	10.038	14	2	5.75	6	76	38	0.00126	10.038	10.063	10.000	10.015
PSFM0610-10	6	10	10	6.028	6.058	10.023	10.038	14	2	9.75	10	126	63	0.00182	10.038	10.063	10.000	10.015
PSFM0812-06	8	12	6	8.033	8.066	12.028	12.046	16	2	5.75	6	100	50	0.00153	12.046	12.071	12.000	12.018
PSFM0812-08	8	12	8	8.033	8.066	12.028	12.046	16	2	7.75	8	134	67	0.00189	12.046	12.071	12.000	12.018
PSFM0812-12	8	12	12	8.033	8.066	12.028	12.046	16	2	11.75	12	202	101	0.00259	12.046	12.071	12.000	12.018
PSFM1016-08	10	16	8	10.033	10.066	16.028	16.046	22	3	7.75	8	168	84	0.00421	16.046	16.071	16.000	16.018
PSFM1016-10	10	16	10	10.033	10.066	16.028	16.046	22	3	9.75	10	210	105	0.00489	16.046	16.071	16.000	16.018
PSFM1016-16	**10**	**16**	**16**	**10.033**	**10.066**	**16.028**	**16.046**	**22**	**3**	**15.75**	**16**	**336**	**168**	**0.00694**	**16.046**	**16.071**	**16.000**	**16.018**
PSFM1218-08	12	18	8	12.034	12.07	18.028	18.046	24	3	7.75	8	202	101	0.00478	18.046	18.071	18.000	18.018
PSFM1218-12	**12**	**18**	**12**	**12.034**	**12.07**	**18.028**	**18.046**	**24**	**3**	**11.75**	**12**	**302**	**151**	**0.00636**	**18.046**	**18.071**	**18.000**	**18.018**
PSFM1519-16	15	19	16	15.034	15.07	19.028	19.046	25	3	15.5	16	504	252	0.00647	19.046	19.071	19.000	19.018
PSFM1620-16	**16**	**20**	**16**	**16.041**	**16.08**	**20.035**	**20.056**	**27**	**3**	**15.5**	**16**	**538**	**269**	**0.00718**	**20.056**	**20.081**	**20.000**	**20.021**
PSFM1620-20	16	20	20	16.041	16.08	20.035	20.056	27	3	19.5	20	672	336	0.00844	20.056	20.081	20.000	20.021
PSFM1620-25	**16**	**20**	**25**	**16.041**	**16.08**	**20.035**	**20.056**	**27**	**3**	**24.5**	**25**	**840**	**420**	**0.01002**	**20.056**	**20.081**	**20.000**	**20.021**
PSFM2026-20	20	26	20	20.042	20.084	26.035	26.056	32	3	19.5	20	840	420	0.01432	26.056	26.081	26.000	26.021
PSFM2026-30	**20**	**26**	**30**	**20.042**	**20.084**	**26.035**	**26.056**	**32**	**3**	**29.5**	**30**	**1260**	**630**	**0.02035**	**26.056**	**26.081**	**26.000**	**26.021**
PSFM2530-20	25	30	20	25.042	25.084	30.035	30.056	39	3.5	19.5	20	1050	525	0.01672	30.056	30.081	30.000	30.021
PSFM2530-25	25	30	25	25.042	25.084	30.035	30.056	39	3.5	24.5	25	1312	656	0.01973	30.056	30.081	30.000	30.021
PSFM2530-32	**25**	**30**	**32**	**25.042**	**25.084**	**30.035**	**30.056**	**39**	**3.5**	**31.5**	**32**	**1680**	**840**	**0.02394**	**30.056**	**30.081**	**30.000**	**30.021**
PSFM3038-30	30	38	30	30.05	30.096	38.043	38.068	46	4	29.5	30	1890	945	0.04145	38.068	38.093	38.000	38.021
PSFM3545-35	35	45	35	35.052	35.102	45.043	45.068	55	5	34.5	35	2572	1286	0.07192	45.068	45.093	45.000	45.025
PSFM4050-40	40	50	40	40.052	40.102	50.043	50.068	60	5	39.5	40	3360	1680	0.09044	50.068	50.093	50.000	50.025
PSFM5060-50	50	60	50	50.062	50.133	60.053	60.099	70	5	49.5	50	5250	2625	0.13429	60.099	60.124	60.000	60.030

Normal stock items in bold type

1kg = 9.8N

The bushes can be freely machined if a reduced lengths or flangeless bushing is required.

Installation instructions

Slip fit: Slip the bearing sleeve into the housing and epoxy into place with Loctite™ or similar type bonding agent. CAUTION: Do NOT let any of the adhesive touch the bearing liner. It will harden and interfere with the running clearance.

Press fit: Freeze the bearings at 0°F (-17.75°C) for 30-45 minutes. Using gloves, remove the bearings from the freezer and slip them into the housing. As they heat to room temperature, full contact between the bearing and housing will be achieved. The greatest advantage to this technique over traditional pressing is greater accuracy in alignment.



Imperial Sizes

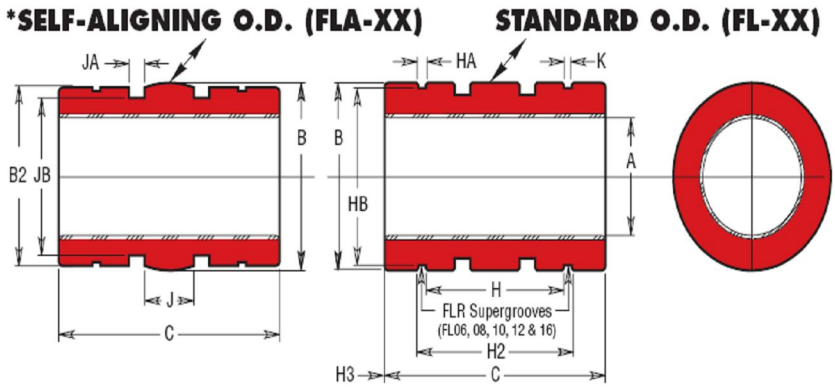

PRECISION I.D. SERIES Similar to preloaded ball bearing					COMPENSATED I.D. SERIES Allows additional running clearance				Standard		SELF-ALIGNING FLA					
Part No.		Nominal Size	A Bearing I.D.		Part No.		A Bearing I.D.		B O.D.		B2 O.D.		C Length		Concentric	Bearing Weight
Closed	Open	Inches	Min.	Max.	Closed	Open	Min.	Max.	Min.	Max.	Min.	Max.	Min.	Max.	Max.	(LBS.)
FL 03	N / A	3/16 "	0.1877	0.1884	FLC 03	FLCN 03	0.1897	0.1904	0.374	0.375	0.3725	0.3735	0.547	0.562	0.001	0.003
FL 04	FLN 04	1/4 "	0.2502	0.2511	FLC 04	FLCN 04	0.2522	0.2531	0.499	0.5	0.4975	0.4985	0.735	0.75	0.001	0.009
FL 06	FLN 06	3/8 "	0.3752	0.3761	FLC 06	FLCN 06	0.3772	0.3781	0.624	0.625	0.6225	0.6235	0.86	0.875	0.001	0.016
FL 08	**FLN 08**	**1/2 "**	**0.5002**	**0.5013**	FLC 08	FLCN 08	0.5022	0.5033	0.874	0.875	0.8725	0.8735	1.235	1.25	0.001	0.041
FL 10	**FLN 10**	**5/8 "**	**0.6252**	**0.6263**	FLC 10	FLCN 10	0.6272	0.6283	1.124	1.125	1.1225	1.1235	1.485	1.5	0.001	0.091
FL 12	**FLN 12**	**3/4 "**	**0.7503**	**0.7516**	FLC 12	FLCN 12	0.7533	0.7546	1.249	1.25	1.2475	1.2485	1.61	1.625	0.001	0.109
FL 16	**FLN 16**	**1 "**	**1.0003**	**1.0016**	FLC 16	FLCN 16	1.0033	1.0046	1.5613	1.5625	1.5599	1.5609	2.235	2.25	0.001	0.228
FL 20	FLN 20	1-1/4 "	1.2504	1.2519	FLC 20	FLCN 20	1.2544	1.2559	1.9988	2	1.9974	1.9984	2.605	2.625	0.001	0.459
FL 24	FLN 24	1-1/2 "	1.5004	1.5019	FLC 24	FLCN 24	1.5044	1.5059	2.3738	2.375	2.3724	2.3734	2.98	3	0.001	0.725
FL 32	FLN 32	2 "	2.0004	2.0022	FLC 32	FLCN 32	2.0054	2.0072	2.9986	3	2.9614	2.9586	3.98	4	0.001	1.442
FL 40	FLN 40	2-1/2 "	2.5004	2.5022	FLC 40	FLCN 40	2.5054	2.5072	3.7484	3.75	3.7472	3.7482	4.975	5	0.0013	2.816
FL 48	FLN 48	3 "	3.0004	3.0022	FLC 48	FLCN 48	3.0064	3.0082	4.498	4.5	4.497	4.498	5.97	6	0.0015	4.914
FL 64	FLN 64	4 "	4.0005	4.0026	FLC 64	FLCN 64	4.0065	4.0086	5.998	6	5.997	5.998	7.96	8	0.002	11.836

Normal stock items in bold type. All dimensions in inches. 1lb = 0.4535kg, 1 lbf = 4.448N

Load data

PART NO.	Effective surface area (SQ. IN.)	Max. Static Load (lbs) GOLD	F & J
FL 03	0.11	220	100
FL 04	0.2	600	300
FL 06	0.34	1020	510
FL 08	0.65	1950	975
FL 10	0.98	2940	1470
FL 12	1.27	3810	1905
FL 16	2.35	7050	3525
FL 20	3.43	10830	5415
FL 24	4.7	14100	7050
FL 32	8.35	25050	12525
FL 40	13	39000	19500
FL 48	18.8	56400	28200
FL 64	33.5	100500	50250

Max PV (ft/min.psi)
Frelon Gold 20000
F&J 10000

Max Speed ft/min (dry)
Frelon Gold 300
F&J 140

Max Speed ft/min (lubed)
Frelon Gold 825
F&J 400





Other Product Offerings from Pacific Bearings

Flanged Bushes

Equivalent to LMK and LMF series ball bush



Die set bushes PAC series



Mini Rail

Equivalent to miniature profile rail

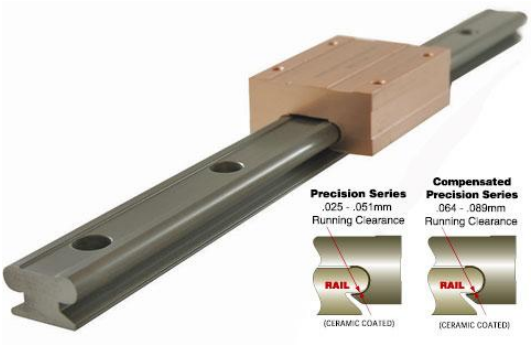

V-rail/Dual Vee

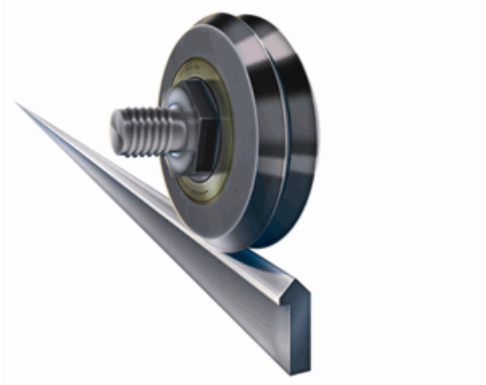

Belt and Ball screw Actuators



Heavy Rail Combined Bearings





Rollon X-rail

Rollon X-rail is an economical solution for machine doors, hatches companion ways and simple guide way applications. Industries such as transportation & marine, medical, packaging, food production, energy and office equipment can all benefit from the simplicity and cost effectiveness of X-rail

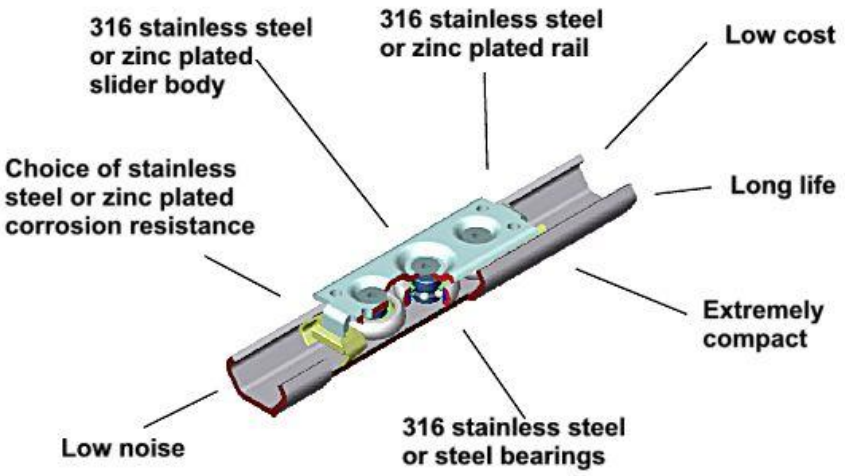

X-Rail has the following features and benefits;

- Internal raceway, sealed roller sliders with scrapers for long service life.
- Compact dimensions for elegant designs and tight spaces
- Full 316 stainless steel TEX, CEX version is ideal for wash down & chemical environments
- Rail available in up to 3.12m lengths that we can cut to your length. Some applications may also allow butt jointing for even longer travel
- Low friction for easy motion
- Eccentric centre rollers gives field adjustable preload to suit the application
- 100deg temperature range and 1.5m/s speed rating
- Rails are non-hardened so a statistical service life is not applicable. X rail is only suitable for low duty cycle applications. Where constant motion or reliable service life is required consider Rollon Compact rail or LM profile rail.

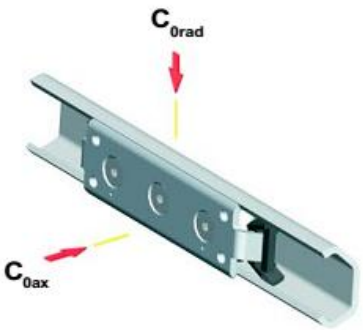

Type	C_{0rad} [N]	C_{0ax} [N]
TEX20 - CEX20	300	170
TEX30 - CEX30	800	400
TEX45 - CEX45	1600	860

Type	C_{0rad} [N]	C_{0ax} [N]
TES20 - CES20	326	185
TES30 - CES30	870	435
TES45 - CES45	1740	935



ROLLON

Rail (TES zinc plated, TEX stainless):

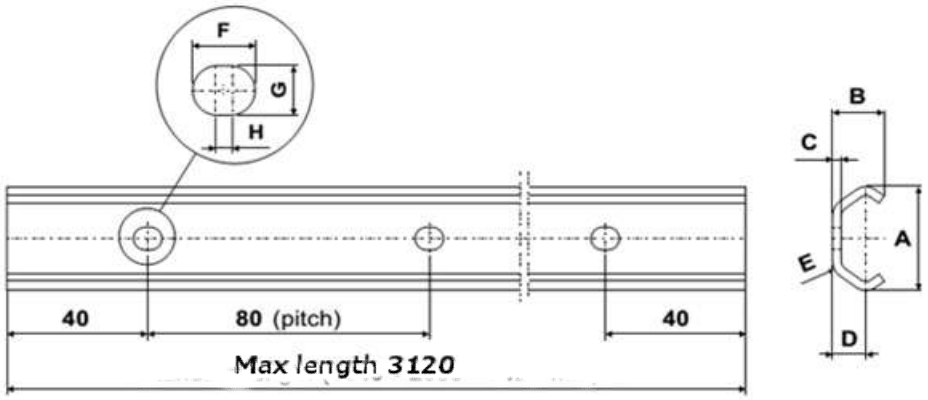

Recommended fastener is a button head cap screw

Type	A	B	C	D	E	F	G	H	Fixing Screws	Weight (g/m)
TES20-TEX20	**19.2**	**10**	**2**	**7**	**3**	**7**	**5**	**2**	**M4**	**470**
TES30-TEX30	**29.5**	**15**	**2.5**	**10**	**4.5**	**8.4**	**6.4**	**2**	**M5**	**900**
TES45-TEX45	46.4	24	4	15.5	6.5	11	9	2	M8	2290

Normal stock items are in bold type.

Slider (CES zinc plated, CEX stainless):

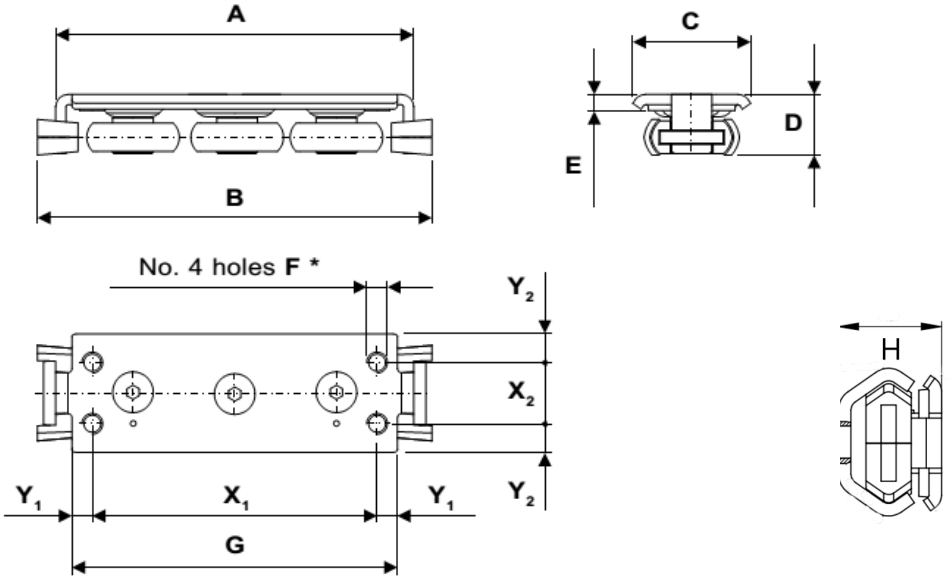

* only for CEX20 / CES20: No. 2 holes (F)

Type	A	B	C	D	H	E	F	G	X1	Y1	X2	Y2	Weight (g)
CES20-CEX20	**80**	**90**	**18**	**11.5**	**16**	**5.5**	**M5**	**71**	**60**	**10**	**-**	**9**	**55**
CES30-CEX30	**88**	**97**	**27**	**15**	**20.5**	**4.5**	**M5**	**80**	**70**	**5**	**15**	**6**	**120**
CES45-CEX45	150	160	40	22	31	4	M6	135	120	7.7	23	8.5	390

Normal stock items are in bold type.



Rollon Compact Rail

Rollon Compact rail is a unique linear motion system ideal for general mechanisms and machine building. Compact rail is an internal raceway, roller bearing design that possesses adjustable preload and self-alignment. Where machine tool grade, high load and high precision, are not as critical as a durable, quiet, reliable, easy to install solution, then compact rail is the obvious choice.

Key benefits of Rollon Compact Rail

- Easy and inexpensive to mount to fabricated frames without machining. It even comes complete with fasteners for counter bored rail type.
- Compact dimensions reduce overall machine size and power requirements.
- Self-aligning capabilities reduce manufacturing complexity, and extend service life.
- Protected internal raceways with spring loaded wipers to increase life and durability.
- Unique lubricators that coat the rail with every stroke for up to 10,000 cycles (except 18 series) for longer life.
- Roller bearings give high-speed capabilities with quieter running and ultra-long life.

Field adjustable preload

By mounting one, (or more) sliders on an adjustable cam the Compact Rail sliders have the unique ability to have their preload adjusted in the field. This allows a free running or highly rigid system to be set up to suit the individual machine requirements.

For example, machine design “A” can be set up with a low friction, low rigidity preload to suit a high output, low mass payload. Conversely machine “B” could have a high friction, high rigidity preload for a lower output, higher mass payload requirement, all with the same rail and slider configurations.

Multiple roller options

Sliders are available in a wide variety of roller configurations as well as the standard 3 roller shielded set up. This allows for axial and radial mountings as well as optimised configurations for yawing and overhanging loads.

Counter bored rail and fasteners

Countersunk rails are available for high precision applications but the vast majority of applications suit the standard counter bored rail. Counter bored rails can accommodate errors in fastening holes positions by allowing the rail to move within the oversized counter bore. This makes installation easier and less stressful.

Counter bore rails come complete with low profile Torx head screws to make installation easy. Torx head fasteners offer high torque transmission with lower stress concentrations and less risk of thread “stripping”. These are optimised for the compact rail system to reduce the head size of the fasteners and the overall size of the rail system and are supplied with the rail.



ROLLON

Joining of Rails

Long travel lengths can be achieved using a simple joining tool that aligns the joins between each rail. This means that theoretically unlimited lengths can be achieved, and installation can be done in the field. This eliminates the misalignment between rail sections and semi-skilled personnel can perform the installation. Where constant preload is required between rails then factory matched rails are recommended.

Self-aligning capability

Rollon compact rail has an amazing self-aligning capability. Careful selection of rail profiles will allow sliders to take up parallelism errors and avoid the need for precision machined bearing sub frame. The three different profiles have the following characteristics.

T profile A rigid section that can carry axial & radial loads and can be mounted as a single rail solution.

U profile Carries full radial load but has no axial rigidity and is commonly mounted in parallel with a T or K section profile.

K profile Carries slightly less axial load to the T profile and no moment about the axis of travel. This allows the slider to rotate in the rail and take up axial parallelism errors.

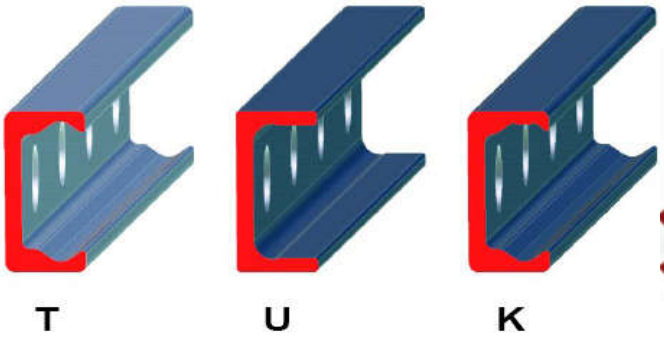

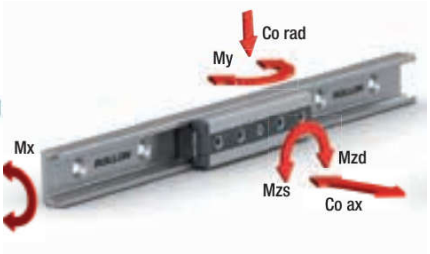

Rail sizes

Rail type	Width	Height	Fastener	Hole Pitch	Hole size CxQxt	Max Length	Weight [kg/m]
ULC18/TLC18	18	8.25	M4	80	9.5x5x2	2000	0.55
ULC28/TLC28	28	12	M5	80	11x6.5x2.7	4080	1.0
ULC43/TLC43/KLC43	43	21	M8	80	18x10.5x3.1	4080	2.6
ULC63/TLC63/KLC63	63	28	M8	80	15x8.5x5.2	4080	6.0

Rail can be supplied cut to length to suit individual requirements. For non-symmetric hole spacing please specify the G dimension (distance to first hole).

Counter sink rail is also available with some types from stock.

Rail with counterbored holes

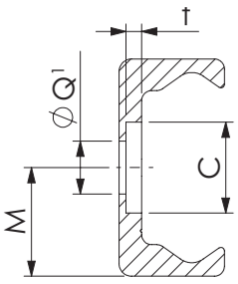



Rollon Compact Rail 18 Series Sliders

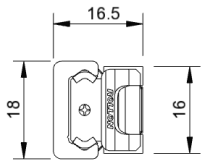

NSW Dimensions

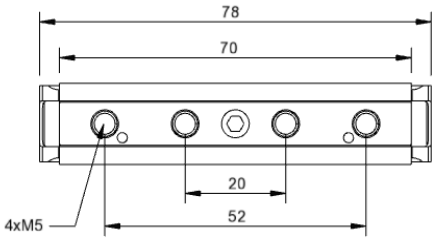

Slider type	No. rollers	Dynamic load C (100km) [N]	Static Load		M x [Nm]	M y [Nm]	M zd [Nm]	M zs [Nm]	Weight [kg]
			C0rad [N]	C0ax [N]					
NSW18-3-Z	**3**	**1530**	**820**	**260**	**1.5**	**4.7**	**8.2**	**8.2**	**0.03**
CSW18-60	3	1530	820	260	1.5	4.7	8.2	8.2	0.04
CSW18-80-A	4	1530	820	300	2.8	7	8.2	24.7	0.05
CSW18-80-B	4	1530	820	300	2.8	7	24.7	8.2	0.05
CSW18-100	5	1830	975	360	2.8	9.4	24.7	24.7	0.06
CSW18-120-A	6	1830	975	440	3.3	11.8	24.7	41.1	0.07
CSW18-120-B	6	1830	975	440	3.3	11.8	41.1	24.7	0.07

Note: For CSW sliders used in U rails Coax, M x and M y are equal to 0. Normal stock items in bold type

Rollon Compact Rail 28 Series Sliders

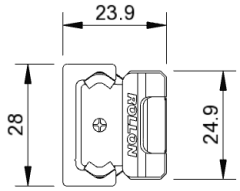

NSW dimensions

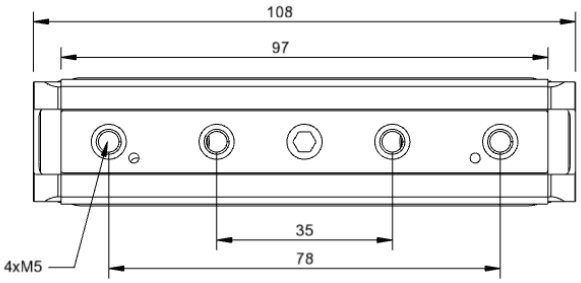

Slider type	No. Rollers	Dynamic load C (100km) [N]	Static Load		M x [Nm]	M y [Nm]	M zd [Nm]	M zs [Nm]	Weight [kg]
			C0rad [N]	C0ax [N]					
NSW28-3-Z	**3**	**4260**	**2170**	**640**	**6.2**	**16**	**27.2**	**27.2**	**0.115**
CSW28-80	3	4260	2170	640	6.2	16	27.2	27.2	0.155
CSW28-100-A	**4**	**4260**	**2170**	**750**	**11.5**	**21.7**	**27.2**	**81.7**	**0.195**
CSW28-100-B	4	4260	2170	750	11.5	21.7	81.7	27.2	0.195
CSW28-125	5	5065	2580	900	11.5	29	81.7	81.7	0.24
CSW28-150-A	**6**	**5065**	**2580**	**1070**	**13.7**	**36.2**	**136.1**	**81.7**	**0.29**
CSW28-150-B	6	5065	2580	1070	13.7	36.2	81.7	136.1	0.29
CDW28-80	3	4260	2170	640	6.2	16	27.2	27.2	0.215
CDW28-125	**5**	**5065**	**2580**	**900**	**11.5**	**29**	**81.7**	**81.7**	**0.3**
NTE28L-3-A	3	4260	2170	640	6.2	29	54.4	54.4	0.2
NTE28L-4-A	4	4260	2170	750	11.5	29	54.4	108.5	0.2
NTE28L-4-B	4	4260	2170	750	11.5	29	108.5	54.4	0.2
NTE28L-4-C	4	4260	2170	750	11.5	29	81.7	81.7	0.2
NTE28L-5-A	5	5065	2580	900	11.5	29	81.7	81.7	0.2
NTE28L-5-B	5	6816	3472	640	6.2	29	54.4	54.4	0.2
NUE28L-3-A	3	4260	2170	0	0	0	54.4	54.4	0.2
NUE28L-4-A	4	4260	2170	0	0	0	54.4	108.5	0.2
NUE28L-4-B	4	4260	2170	0	0	0	108.5	54.4	0.2
NUE28L-4-C	4	4260	2170	0	0	0	81.7	81.7	0.2
NUE28L-5-A	5	5065	2580	0	0	0	81.7	81.7	0.2
NUE28L-5-B	5	6816	3472	0	0	0	54.4	54.4	0.2

Note: For CSW and CDW sliders used in U rails Coax, M x and M y are equal to 0. Normal stock items in bold type



ROLLON

Rollon Compact Rail 43 Series Sliders

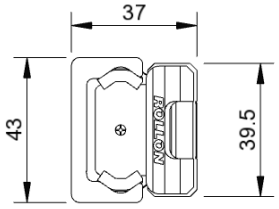

NSW Dimensions

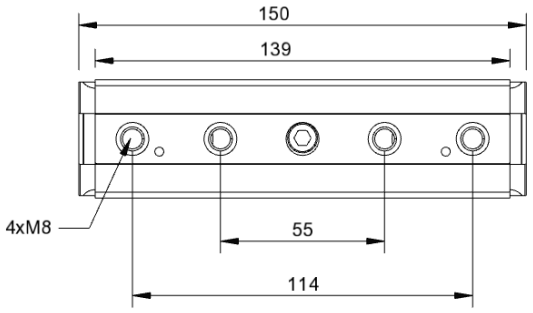

NSW sliders fit both T and U rail and NSA run in K rail.

Slider type	No. Rollers	Dynamic load C (100km) [N]	Static Load C0rad [N]	Static Load C0ax [N]	M x [Nm]	M y [Nm]	M zd [Nm]	M zs [Nm]	Weight [kg]
NSW43-3-Z	**3**	**12280**	**5500**	**1570**	**23.6**	**60**	**104.5**	**104.5**	**0.385**
NSA43-3-Z	**3**	**12280**	**5100**	**1320**	**0**	**50.4**	**96.9**	**96.9**	**0.385**
CSW43-120	3	12280	5500	1570	23.6	60	104.5	104.5	0.53
CSW43-150-A	**4**	**12280**	**5500**	**1855**	**43.6**	**81.5**	**104.5**	**313.5**	**0.68**
CSW43-150-B	4	12280	5500	1855	43.6	81.5	313.5	104.5	0.68
CSW43-190	**5**	**14675**	**6540**	**2215**	**43.6**	**108.6**	**313.5**	**313.5**	**0.84**
CSW43-230-A	**6**	**14675**	**6540**	**2215**	**52**	**135.8**	**313.5**	**522.5**	**1.01**
CSW43-230-B	6	14675	6540	2215	52	135.8	522.5	313.5	1.01
CDW43-120	**3**	**12280**	**5500**	**1570**	**23.6**	**60**	**104.5**	**104.5**	**0.64**
CDW43-190	5	14675	6540	2215	43.6	108.6	313.5	313.5	0.95
NTE43L-3-A	3	12280	5500	1570	23.6	108.6	209	209	0.6
NTE43L-4-A	4	12280	5500	1855	43.6	108.6	209	418	0.6
NTE43L-4-B	4	12280	5500	1855	43.6	108.6	418	209	0.6
NTE43L-4-C	4	12280	5500	1855	43.6	108.6	313.5	313.5	0.6
NTE43L-5-A	5	14675	6540	2215	43.6	108.6	313.5	313.5	0.6
NTE43L-5-B	5	19650	8800	1570	23.6	108.6	209	209	0.6
NUE43L-3-A	3	12280	5500	0	0	0	209	209	0.6
NUE43L-4-A	4	12280	5500	0	0	0	209	418	0.6
NUE43L-4-B	4	12280	5500	0	0	0	418	209	0.6
NUE43L-4-C	4	12280	5500	0	0	0	313.5	313.5	0.6
NUE43L-5-A	5	14675	6540	0	0	0	313.5	313.5	0.6
NUE43L-5-B	5	19650	8800	0	0	0	209	209	0.6
NKE43L-3-A	3	12280	5100	1320	0	97.7	188.7	188.7	0.6
NKE43L-4-A	4	12280	5100	1320	0	97.7	188.7	377.3	0.6
NKE43L-4-B	4	12280	5100	1320	0	97.7	377.3	188.7	0.6
NKE43L-4-C	4	12280	5100	1320	0	97.7	283	283	0.6
NKE43L-5-A	5	14675	6065	1980	0	97.7	283	283	0.6
NKE43L-5-B	5	19650	8160	1320	0	97.7	188.7	188.7	0.6

Note: For CSW and CDW sliders used in U rails Coax, M x and M y are equal to 0.
Normal stock items in bold type



Rollon Compact Rail 63 Series Sliders

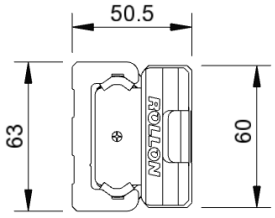

NSW Dimensions

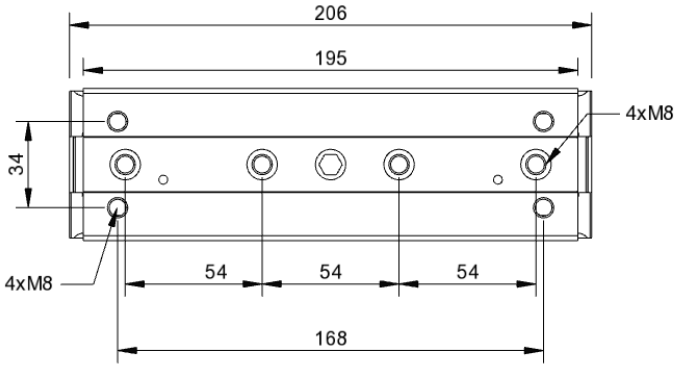

NSW sliders fit both T and U rail and NSA run in K rail.

Slider type	No. Rollers	Dynamic load C (100km) [N]	Static Load		M x [Nm]	M y [Nm]	M zd [Nm]	M zs [Nm]	Weight [kg]
			C0rad [N]	C0ax [N]					
NSW63-3-Z	**3**	**30750**	**12500**	**6000**	**125**	**271**	**367**	**367**	**1.07**
NSA63-3-Z	**3**	**30750**	**11550**	**5045**	**0**	**235**	**335**	**335**	**1.07**
CSW63-180	3	30750	12500	6000	125	271	367	367	1.66
CSW63-235-A	4	30750	12500	7200	250	413	367	1100	2.17
CSW63-235-B	4	30750	12500	7200	250	413	1100	367	2.17
CSW63-290	5	36600	15000	8500	250	511	1100	1100	2.67
CSW63-345-A	6	36600	15000	10000	350	689	1100	1830	3.17
CSW63-345-B	6	36600	15000	10000	350	689	1830	1100	3.17

Normal stock items in bold type

Corrosion protection

The slider bodies are electro nickel coated as standard and the rollers are bearing steel. When used in most applications the lubrication coating on the rollers will offer adequate corrosion protection. For more demanding applications SS rollers can be supplied in some sizes.

All rails come with electrolytic zinc plating as standard. The bearing surfaces are honed during manufacture and this eliminates the zinc plating. Once the rails are in operation a film of grease protects the raceways.

For higher corrosion protection chemical nickel plating can be applied. This coating also covers the honed part of the raceways.



ROLLON

Rollon Uniline Actuators



Compact rail integrated with a belt drive and enclosed in an aluminium extrusion. A bolt in linear actuator compatible with a wide range of servo, stepper or AC motors. Can provide rapid and reliable positioning in a great looking professional package. Can be mounted together for multi-axes applications.

All the components for Uniline actuators are stocked in NZ for short lead times, customised systems and field support.

Rollon Ecoline



A lighter weight system to a Uniline with nylon wheel sliders running within an aluminium extrusion. Provides a professional looking, quiet linear system. Up to 6m strokes and 30kg load per slider.

Timing belt linear actuator version also available and all components stocked in NZ.

Rollon Telescopic Rail



Precision telescopic solutions for high load smooth running and continuous movement. Allows compact machine sizes and offers a high quality motion. Larger variety of sizes and configurations to suit almost any application.

When a draw slide will not do, Telescopic rail is the answer.

Rollon Easyslide

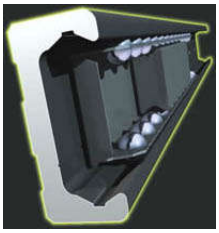

Simple yet durable bearings. Offering compact dimensions, smooth motion, easy mounting all in an integrated guideway. Multiple sizes, length and multi slider options available.

Ideal for doors and protective enclosures.

Rollon Curviline



A guide way solution for curved applications. Fixed and variable radius options available to suit almost any requirements. Durable roller sliders that follow the profile without changes to preload.

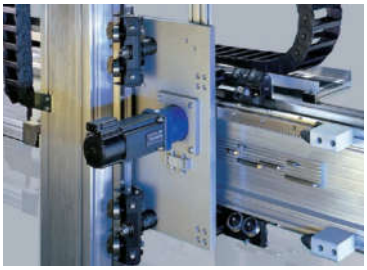

Rollon Techline

High performance rack and roller guide solution mounted on a flexible aluminium extrusion.

High speed and load capacities with the maximum of integration.



Linear motion (LM) Guideways

LM profile rail is the linear standard and also commonly known as “Profile Rail”. Widely used where precision motion with rigidity is required. This is the standard guide method in machine tools and production lines. Bearing blocks can also be supplied with aluminium end caps for high temperature applications or with Raydent coating for corrosion protection or for aggressive chemical environments.

NEW high load SBI type

- On average 30% high static and dynamic life
- More rigid and stable structure
- Larger radius gives more efficient ball return
- More efficient seals
- Small increase in overall length
- Same mounting holes as standard types

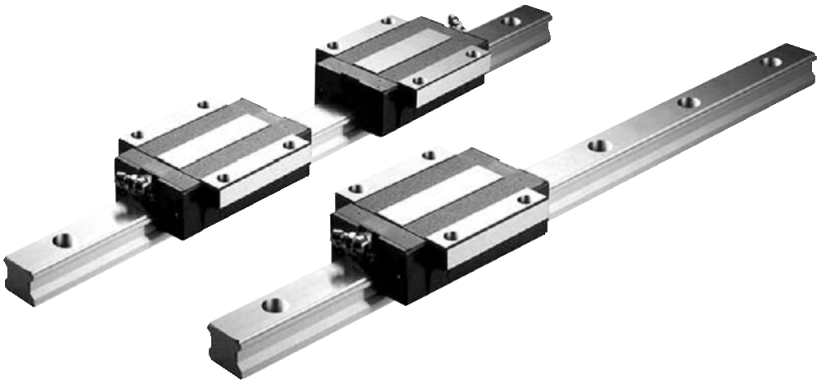

Rails

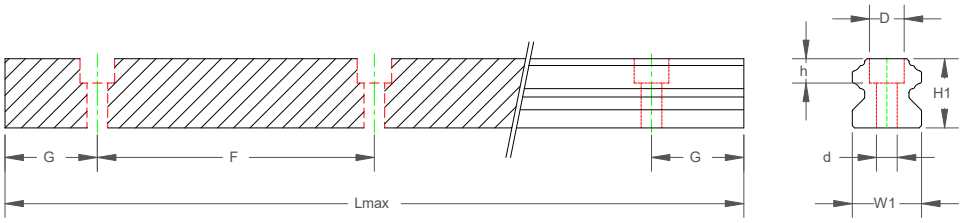

Base mounted rail also available

Series	W1	H1	F	dxDxh	Lmax	Weight (kg/m)
15	15	13	60	4.5x7.5x5.3	3000	1.45
20	20	16.5	60	6x9.5x8.5	4000	2.2
25	23	20	60	7x11x9	4000	3.1
30	28	23	80	9x14x12	4000	4.45
35	34	26	80	9x14x12	4000	6.4
45	45	32	105	14x20x17	4000	11.25
55	53	38	120	16x23x20	4000	15.25
65	63	53	150	18x26x22	3000	23.9



SBI Rail



SBG Rail

- Except for miniatures SBC profile rail is fully interchangeable within each family. Any block type or style can run on the same sized rail. SBI rail and blocks are not interchangeable with SBG.
- Longer rail lengths can be achieved by milled the rail faces and butt joining. Matched rails from the factory are recommended.
- Rail can be supplied cut to length. Please specify G dimension, or distance to first hole. If this is not specified the rails will be cut with symmetric hole spacing.
- Plastic hole plugs or SS rail tape can be supplied to seal fastener holes and prevent contamination.
- SPG plastic spacer “Quiet Type” version of SBG types also available.
- Base mounted rail available
- NGLI grade 2 synthetic grease is recommended for most applications.



SBC Linear Co., Ltd.

High Load Flanged SBI_FL

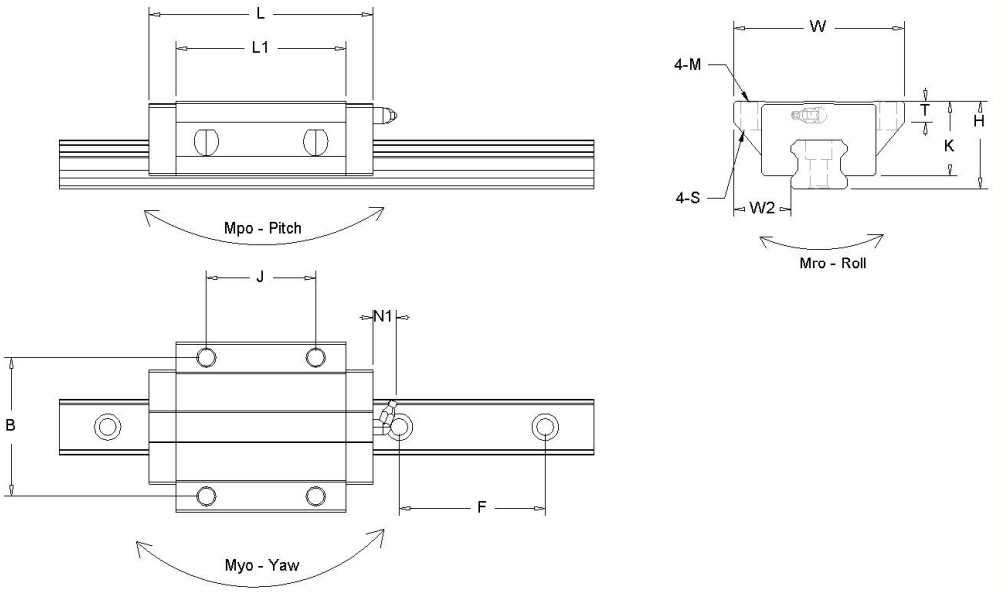

Normal	Mounting Dimensions				Block Dimensions						Load Capacity					Bearing Weight
											Dynamic	Static	Mro	Mpo	Mo	
	H	W2	W	L	BxJ	M	S	L1	K	T	C (50 km) kN	Co kN	kN.m	kN.m	kN.m	
SBI15FLS	24	16	47	56.8	38x30	M5	M4	38.2	21	11	12.3	18.3	0.13	0.08	0.08	0.2
SBI15FL	**24**	**16**	**47**	**63.8**	**38x30**	**M5**	**M4**	**45.2**	**21**	**8.8**	**14.1**	**24.1**	**0.16**	**0.17**	**0.17**	**0.24**
SBI15FLL	**24**	**16**	**47**	**79.4**	**38x30**	**M5**	**M4**	**60.8**	**21**	**8.8**	**17.1**	**31.7**	**0.21**	**0.29**	**0.29**	**0.3**
SBI20FLS	30	21.5	63	73.8	53x40	M6	M5	51.8	25.4	12	20.2	29.1	0.29	0.18	0.18	0.44
SBI20FL	**30**	**21.5**	**63**	**78.8**	**53x40**	**M6**	**M5**	**56.8**	**25.4**	**12**	**22.2**	**38.2**	**0.36**	**0.33**	**0.33**	**0.46**
SBI20FLL	**30**	**21.5**	**63**	**96.4**	**53x40**	**M6**	**M5**	**74.4**	**25.4**	**12**	**27.9**	**50**	**0.47**	**0.56**	**0.56**	**0.6**
SBI25FLS	36	23.5	70	83	57x45	M8	M6	61	30.5	12.5	58.9	42.8	0.49	0.32	0.32	0.66
SBI25FL	**36**	**23.5**	**70**	**92**	**57x45**	**M8**	**M6**	**70**	**30.5**	**12.5**	**31.5**	**52.1**	**0.56**	**0.56**	**0.56**	**0.75**
SBI25FLL	**36**	**23.5**	**70**	**108**	**57x45**	**M8**	**M6**	**86**	**30.5**	**12.5**	**36.7**	**64.4**	**0.69**	**0.84**	**0.84**	**0.0.8**
SBI30FLS	42	31	90	96.8	72x52	M10	M8	68.8	35	15.5	39.2	57.7	0.8	0.49	0.49	1.08
SBI30FL	**42**	**31**	**90**	**107.6**	**72x52**	**M10**	**M8**	**79.6**	**35**	**15.5**	**42.8**	**65.4**	**0.85**	**0.77**	**0.77**	**1.25**
SBI30FLL	**42**	**31**	**90**	**131.6**	**72x52**	**M10**	**M8**	**103.6**	**35**	**15.5**	**51.3**	**84.7**	**1.1**	**1.3**	**1.3**	**1.65**
SBI35FLS	48	33	100	108.2	82x62	M10	M8	78.2	40.5	15	52	73.3	1.24	0.71	0.71	1.53
SBI35FL	**48**	**33**	**100**	**124.6**	**82x62**	**M10**	**M8**	**94.6**	**40.5**	**15**	**59.5**	**89.1**	**1.42**	**1.28**	**1.28**	**1.92**
SBI35FLL	**48**	**33**	**100**	**152.6**	**82x62**	**M10**	**M8**	**122.6**	**40.5**	**15**	**71.3**	**115.3**	**1.83**	**2.12**	**2.12**	**2.43**
SBI45FL	**60**	**37.5**	**120**	**148**	**100x80**	**M12**	**M10**	**108**	**51**	**18**	**79.2**	**116.3**	**2.48**	**1.9**	**1.9**	**3.25**
SBI45FLL	60	37.5	120	180	100x80	M12	M10	140	51	18	94.8	150.5	3.21	3.14	3.14	4.40

Normal stock items in bold type 1kN = 101kgf



High Load Block Type SBI_SL

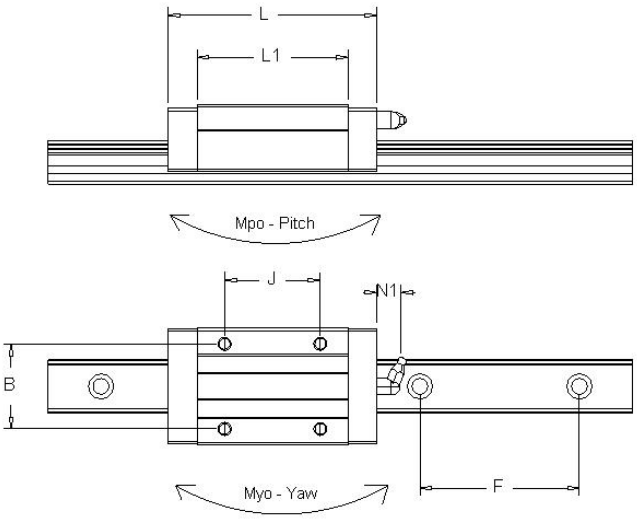

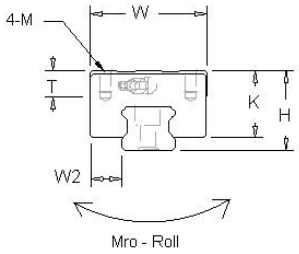

Normal	Mounting Dimensions				Block Dimensions					Load Capacity					
										Dynamic	Static	Mro	Mpo	Mo	
	H	W2	W	L	BxJ	MxDP	L1	K	T	C (50 km) kN	Co kN	kN.m	kN.m	kN.m	Bearing Weight
SBI15SLS	28	9.5	34	56.8	26x26	M4x5	38.2	25	10	12.3	18.3	0.13	0.08	0.08	0.19
SBI15SL	**28**	**9.5**	**34**	**63.8**	**26x26**	**M4x5**	**45.2**	**25**	**10**	**14.1**	**24.1**	**0.16**	**0.17**	**0.17**	**0.23**
SBI15SLL	28	9.5	34	79.4	26x34	M4x5	60.8	25	10	17.1	31.7	0.21	0.29	0.26	0.26
SBI20SLS	30	12	44	73.8	32x36	M5x5	51.8	25.4	10	20.2	29.1	0.29	0.18	0.18	0.33
SBI20SL	**30**	**12**	**44**	**78.8**	**32x36**	**M5x5**	**56.8**	**25.4**	**10**	**22.2**	**38.2**	**0.36**	**0.33**	**0.33**	**0.36**
SBI20SLL	**30**	**12**	**44**	**96.4**	**32x50**	**M5x5**	**74.4**	**25.4**	**10**	**27.9**	**50.0**	**0.47**	**0.56**	**0.56**	**0.47**
SBI25SLS	**40**	**12.5**	**48**	**83**	**35x35**	**M6x8**	**61**	**34.5**	**16**	**28.9**	**42.8**	**0.49**	**0.32**	**0.32**	**0.58**
SBI25SL	**40**	**12.5**	**48**	**92**	**35x35**	**M6x8**	**70**	**34.5**	**16**	**31.5**	**52.1**	**0.56**	**0.56**	**0.56**	**0.68**
SBI25SLL	**40**	**12.5**	**48**	**108**	**35x50**	**M6x8**	**86**	**34.5**	**16**	**36.7**	**64.4**	**0.69**	**0.84**	**0.84**	**0.82**
SBI30SLS	**45**	**16**	**60**	**69.8**	**40x40**	**M8x10**	**68.8**	**38**	**12**	**39.2**	**57.7**	**0.8**	**0.49**	**0.49**	**0.92**
SBI30SL	**45**	**16**	**60**	**107.6**	**40x40**	**M8x10**	**79.6**	**38**	**12**	**42.8**	**65.4**	**0.85**	**0.77**	**0.77**	**1.06**
SBI30SLL	**45**	**16**	**60**	**131.6**	**40x60**	**M8x10**	**103.6**	**38**	**12**	**51.3**	**84.7**	**1.1**	**1.3**	**1.3**	**1.36**
SBI35SLS	55	18	70	108.2	50x50	M8x10	78.2	47.5	18	52	73.3	1.24	0.71	0.71	1.48
SBI35SL	55	18	70	124.6	50x50	M8x10	94.6	47.5	15	59.5	89.1	1.42	1.28	1.28	1.82
SBI35SLL	55	18	70	152.6	50x72	M8x10	122.6	47.5	15	71.3	115.3	1.83	2.12	2.12	2.32
SBI45SL	70	20	86	148	60x60	M10x13	108	61	17	79.2	116.3	2.48	1.9	1.9	2.8
SBI45SLL	70	20	86	180	60x80	M10x13	140	61	17	94.8	150.5	3.21	3.14	3.14	3.69

Normal stock items in bold type 1kN = 101kgf

We recommend low profile SBI_HL/CL types on next the page



Linear Rail System SBC **SBC Linear Co., Ltd.**

High Load Block Type Low Profile SBI_HL/CL

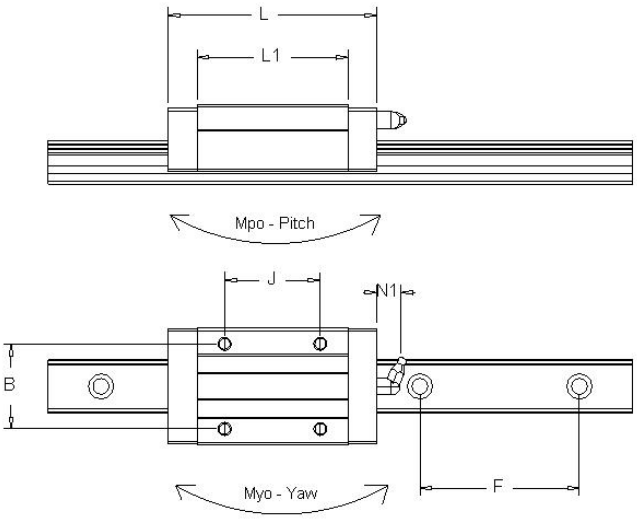

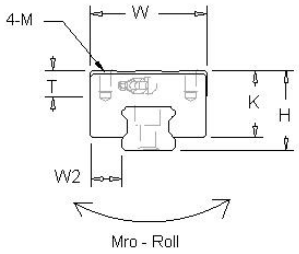

Normal	Mounting Dimensions				Block Dimensions					Load Capacity					Bearing Weight
	H	W2	W	L	BxJ	MxDP	L1	K	T	Dynamic C (50 km) kN	Static Co kN	Mro kN.m	Mpo kN.m	Mo kN.m	
SBI15HLS	24	9.5	34	56.8	26x26	M4x4	38.2	21	6	12.3	18.3	0.13	0.08	0.8	0.15
SBI15HL	**24**	**9.5**	**34**	**63.8**	**26x26**	**M4x4**	**45.2**	**21**	**6**	**14.1**	**24.1**	**0.16**	**0.17**	**0.17**	**0.18**
SBI15HLL	24	9.5	34	79.4	26x34	M4x4	60.8	21	6	17.1	31.7	0.21	0.29	0.29	0.24
SBI20CLS	**28**	**11**	**42**	**65.2**	**32x32**	**M5x5**	**43.2**	**23.4**	**7.8**	**19.1**	**27**	**0.27**	**0.15**	**0.23**	**0.23**
SBI20CL	**28**	**12**	**44**	**78.8**	**32x32**	**M5x5**	**56.8**	**23.4**	**7.8**	**22.2**	**38.2**	**0.36**	**0.33**	**0.33**	**0.32**
SBI20CLL	**28**	**12**	**44**	**96.4**	**32x50**	**M5x5**	**74.4**	**23.4**	**7.8**	**27.9**	**50**	**0.47**	**0.56**	**0.56**	**0.41**
SBI25CL	**33**	**12.5**	**48**	**92**	**35x35**	**M6x6**	**70**	**27.5**	**9**	**31.5**	**52.1**	**0.56**	**0.56**	**0.56**	**0.49**
SBI25CLL	33	12.5	48	108	35x50	M6x6	86	27.5	9	36.7	64.4	0.69	0.84	0.84	0.57
SBI25HLS	36	12.5	48	83	35x35	M6x6	61	30.5	12	28.9	42.8	0.49	0.32	0.32	0.47
SBI25HL	**36**	**12.5**	**48**	**92**	**35x35**	**M6x6**	**70**	**30.5**	**12**	**31.5**	**52.1**	**0.56**	**0.56**	**0.56**	**0.49**
SBI25HLL	**36**	**12.5**	**48**	**108**	**35x50**	**M6x6**	**86**	**30.5**	**12**	**36.7**	**64.4**	**0.69**	**0.84**	**0.84**	**0.6**
SBI20HLS	42	16	60	96.8	40x40	M8x8	68.8	35	12	39.2	57.7	0.8	0.49	0.49	0.8
SBI30HL	**42**	**16**	**60**	**107.6**	**40x40**	**M8x8**	**79.6**	**35**	**12**	**42.8**	**65.4**	**0.85**	**0.77**	**0.77**	**0.95**
SBI30HLL	42	16	60	131.6	40x60	M8x8	103.6	35	12	51.3	84.7	1.1	1.3	1.3	1.22
SBI35HLS	48	18	70	108.2	50X50	M8x8	78.2	40.5	15	52	73.3	1.24	0.71	0.71	1.35
SBI35HL	**48**	**18**	**70**	**124.6**	**50x50**	**M8x8**	**94.6**	**40.5**	**15**	**59.5**	**89.1**	**1.42**	**1.28**	**1.28**	**1.87**
SBI35HLL	48	18	70	152.6	50x72	M8x8	122.6	40.5	15	71.3	115.3	1.83	2.12	2.12	2.04
SBI45HL	**60**	**20**	**86**	**148**	**60x60**	**M10x13**	**108**	**51**	**17**	**79.2**	**116.3**	**2.48**	**1.9**	**1.9**	**2.8**
SBI45HLL	**60**	**20**	**86**	**180**	**60x80**	**M10x13**	**140**	**51**	**17**	**94.8**	**150.5**	**3.21**	**3.14**	**3.14**	**3.69**

Normal stock items in bold type 1kN = 101kgf



High Load Super Compact Flanged SBI_FV

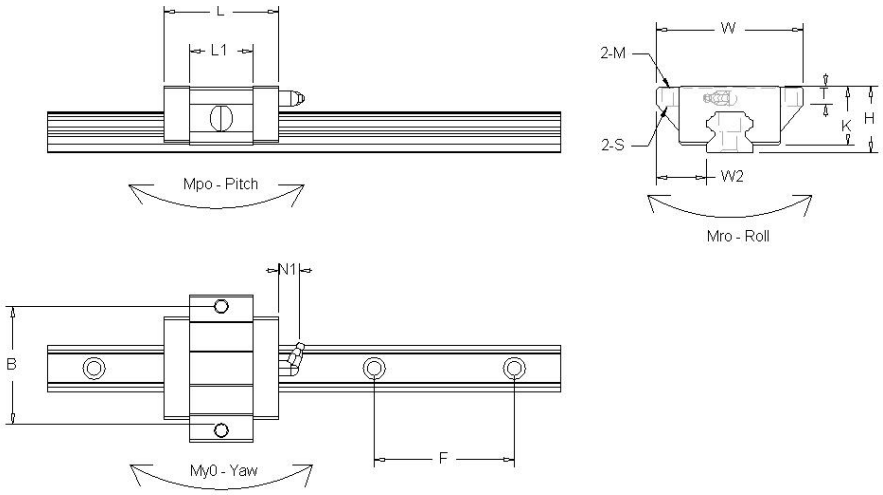

Normal	Mounting Dimensions				Block Dimensions						Load Capacity Dynamic	Static	Mro	Mpo	Mo	Bearing Weight
	H	W2	W	L	B	M	S	L1	K	T	C (50 km) kN	Co kN	kN.m	kN.m	kN.m	
SBI15FV	**24**	**16**	**47**	**39.9**	**38**	**M5**	**M4**	**21.3**	**21**	**9**	**5.8**	**12.8**	**0.05**	**0.03**	**0.03**	**0.11**
SBI20FV	**28**	**21.5**	**63**	**49.1**	**53**	**M6**	**M5**	**27.1**	**23.4**	**12**	**9.4**	**20.2**	**0.15**	**0.11**	**0.11**	**0.23**
SBI25FV	**33**	**23.5**	**70**	**52.6**	**57**	**M8**	**-**	**30.6**	**27.5**	**13**	**12.4**	**26.1**	**0.21**	**0.14**	**0.14**	**0.32**

Normal stock items in bold type 1kN = 101kgf

High Load Super Compact Block Type SBI_SV

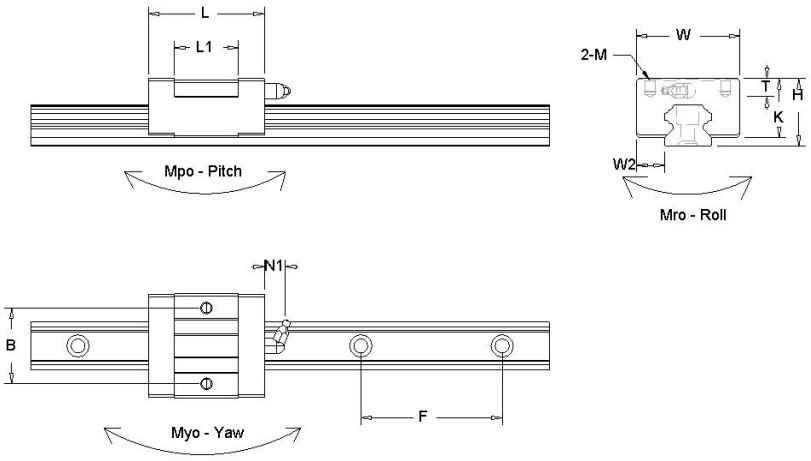

Normal	Mounting Dimensions				Block Dimensions					Load Capacity Dynamic	Static	Mro	Mpo	Mo	Bearing Weight
	H	W2	W	L	B	MxDP	L1	K	T	C (50 km) kN	Co kN	kN.m	kN.m	kN.m	
SBI15SV	**24**	**9.5**	**34**	**39.9**	**26**	**M4x4**	**21.3**	**21**	**6**	**5.8**	**12.8**	**0.05**	**0.03**	**0.03**	**0.1**
SBI20SV	**28**	**12**	**44**	**49.1**	**32**	**M5x5**	**27.1**	**23.4**	**7.8**	**9.4**	**20.2**	**0.15**	**0.11**	**0.11**	**0.22**
SBI25SV	**33**	**12.5**	**48**	**52.6**	**35**	**M6x6**	**30.6**	**27.5**	**9**	**12.4**	**26.1**	**0.21**	**0.14**	**0.14**	**0.3**

Normal stock items in bold type 1kN = 101kgf



Miniatures MGN and MGW

Ideal for jigs, Z-axis guides, inspection equipment and packaging machines. Standard stocked types are stainless steel.

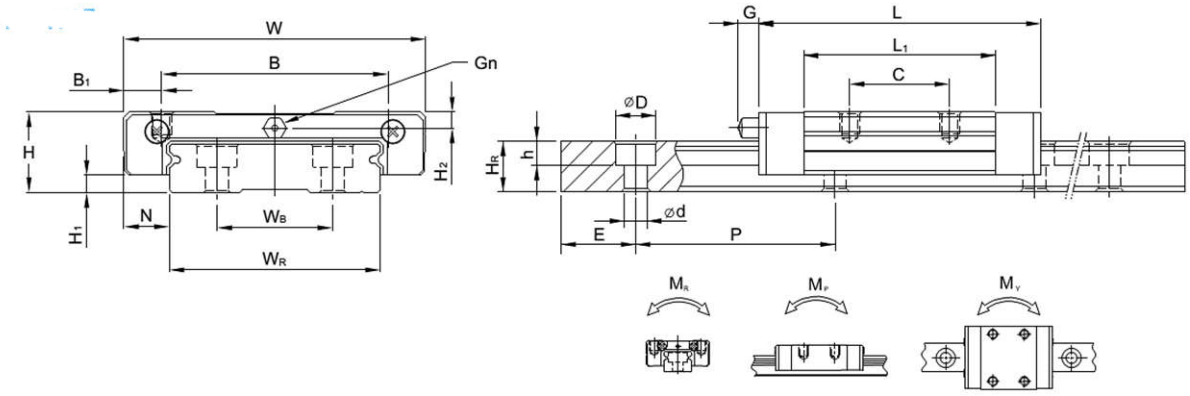

				Block										C	C0	MR	MP	MY	Block
Model	**H**	**H1**	**N**	**W**	**B**	**B1**	**C**	**L1**	**L**	**G**	**Gn**	**Mxl**	**H2**	**kN**	**kN**	**Nm**	**Nm**	**Nm**	**kg**
MGN5C	6	1.5	3.5	12	8	2	-	9.6	16	-	Ø0.8	M2x1.5	1	0.54	0.84	2	1.3	1.3	0.008
MGN7C	8	1.5	5	17	12	2.5	8	13.5	22.5	-	Ø1.2	M2x2.5	1.5	0.98	1.24	4.7	2.84	2.84	0.01
MGN7H							13	21.8	30.8					1.37	1.96	7.64	4.8	4.8	0.015
MGN9C	**10**	**2**	**5.5**	**20**	**15**	**2.5**	**10**	**18.9**	**28.9**	**-**	**Ø1.4**	**M3x3**	**1.8**	**1.86**	**2.55**	**11.76**	**7.35**	**7.35**	**0.016**
MGN9H							16	29.9	39.9					2.55	1.96	19.6	18.62	18.62	0.026
MGN12C	**13**	**3**	**7.5**	**27**	**20**	**3.5**	**15**	**21.7**	**34.7**	**-**	**Ø2**	**M3x3.5**	**2.5**	**2.84**	**3.92**	**25.48**	**13.72**	**13.72**	**0.034**
MGN12H							20	32.4	45.4					3.72	5.88	38.22	36.26	36.26	0.054
MGN15C	**16**	**4**	**8.5**	**32**	**25**	**3.5**	**20**	**26.7**	**42.1**	**4.5**	**Ø2**	**M3x4**	**3**	**4.61**	**5.59**	**45.08**	**21.56**	**21.56**	**0.059**
MGN15H							25	43.4	58.8					6.37	9.11	73.5	57.82	57.82	0.092
MGW5C	6.5	1.5	3.5	1	13	2	-	14.1	20.5	-	Ø0.8	M2x1.5	1	0.68	1.18	5.5	2.7	2.7	0.16
MGW5CL					-	-	6.5					M3-Thru							
MGW7C	9	1.9	5.5	25	19	3	10	21	32.2	-	Ø1.2	M3x3	1.85	1.37	2.06	15.7	7.14	7.14	0.02
MGW7H							19	30.8	41					1.77	3.14	23.45	15.53	15.53	0.029
MGW9C	12	2.9	6	30	21	4.5	12	27.5	39.3	-	Ø1.2	M3x3	2.4	2.75	4.12	40.12	18.96	18.96	0.04
MGW9H					23	3.5	24	38.5	50.7					3.43	5.89	54.54	34	34	0.57
MGW12C	**14**	**3.4**	**8**	**40**	**28**	**6**	**15**	**31.3**	**46.1**	**-**	**Ø1.2**	**M3x3.6**	**2.8**	**3.92**	**5.59**	**70.34**	**27.8**	**27.8**	**0.071**
MGW12H							28	45.6	60.4					5.1	8.24	102.7	57.37	57.37	0.103
MGW15C	**16**	**3.4**	**9**	**60**	**45**	**7.5**	**20**	**38**	**54.8**	**5.2**	**M3**	**M4x4.2**	**3.2**	**6.77**	**9.22**	**199.34**	**56.66**	**56.66**	**0.143**
MGW15H							35	57	73.8					8.93	13.38	299.01	122.6	122.6	0.215

Normal stock items in bold type 1kN = 101kgf

Miniature Rail Dimensions

	Rail								Rail bolt	
Model	**WR**	**WB**	**HR**	**D**	**h**	**d**	**P**	**E**		**kg/m**
MGN5	5	-	3.6	3.6	0.8	2.4	15	5	M2x6	0.15
MGN7	7	-	4.8	4.2	2.3	2.4	15	5	M2x6	0.22
MGN9	9	-	6.5	6	3.5	3.5	20	7.5	M3x8	0.38
MGN12	12	-	8	6	4.5	3.5	25	10	M3x8	0.65
MGN15	15	-	10	6	4.5	3.5	40	15	M3x10	1.06
MGW5	10	-	4	5.5	1.6	3	20	5	M2x7	0.34
MGW7	14	-	5.2	6	3.2	6.5	30	10	M3x6	0.51
MGW9	18	-	7	6	4.5	3.5	30	10	M3x8	0.91
MGW12	24	-	8.5	8	4.5	4.5	40	15	M4x8	1.49
MGW15	42	23	9.5	8	4.5	4.5	40	15	M4x10	2.86

RAYDENT® Surface improving technology Super rust-inhibiting treatment to strengthen a base metal

Raydent Corrosion Resistance

Raydent treatment technology is an alloyed surface formed by an electrochemical reaction below O°C. Part of this surface forms an alloy like layer in the periphery of the metal through a diffusion process. This way the base material and layer are completely integrated into each other and are joined "permanently". Through this total integration into the base material, the layer can neither flake nor peel off. The resulting surface consists of a uniform film and forms an extremely resistant rust protection film based on chromium ceramic.

Advantages:

No hydrogen embrittlement, no tempering process necessary (material's original properties are retained completely)/ improved relationship between hardness and elasticity/ most resistant and effective rust protection layer of all conventional processes/ in friction or wear resistant applications no peeled particles occur/ ideal option to increase service life of parts in rust protection and abrasion applications.

Properties:

Type:	under 0°C diffusion layer growth
Color:	black
Layer thickness:	1~2 μm (additional advantage is the geometries do not change)
Corrosion protection:	typically life of more than 10 years (up to 20 or more years are possible)
Friction/abrasion:	very resistant, since no particles can be flaked or peeled of
Miscellaneous:	No change in microstructure during the process

Comparison Table

Type	Anticorrosive ability	Abrasion	Surface hardness	Adhesion	Appearance
Martensite Stainless Steel (SUS440C)	√√	√√	√√	-	Metallic lustre
Austenitic Stainless Steel (SUS316L)	√√	√	•	-	Metallic lustre
Chrome Plating (Cr)	√	√√	√√	√√	Metallic lustre
Nickel Plating (Ni)	√√	√	√	X	Metallic lustre
Raydent Treatment (R)	√√	√√	√√	√√	Blackish
√√ - Excellent, √ - Good, • - Not Bad, X - Bad					

Key benefits for linear systems

- Corrosion resistance comparable to 316 stainless suitable for most environments.
- No dimensional change to maintain bearing performance.
- Can be used for ball bushes, ballscrews and profile rail.
- Maintains hardness of the substrate and bearing life not compromised.
- Can be applied to ball bushes and profile rail.
- Full chrome balls usually supplied for resistance of the rolling elements.

Note: as with all materials there is no resistance to attack from all possible chemicals. There will be chemicals that can cause corrosion of Raydent. This treatment has been shown to have excellent resistance to common industrial chemicals such as sulphuric acid, sodium hydroxide (caustic wash down) and salt (brine) environments.

RAYDENT® Surface improving technology Super rust-inhibiting treatment to strengthen a base metal



Raydent treated SBC profile rail with stainless steel scrapers.



Raydent treated 63x20 ballscrew



Trapezoidal Screw Shafts

A popular linear drive mechanism for situations where constant motion is not required. Can be hand or motor driven and ideal for machine adjustment, gate or guard openers and presses. Due to its self-locking characteristics it is ideal for intermittent lift mechanisms.

Trapezoidal Shafts

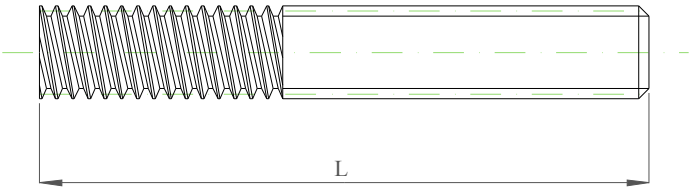

- Available in left and right hand threads
- Material S45C (1045 med tensile)
- Also available in SUS303 stainless (designation TMS)
- Talk to us about bearing journals and machining

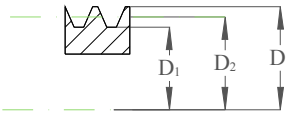

Items in **bold** are normal stock items

We will cut to your length for a nominal cutting charge

Part No.	Lead P	Lead Angle	Standard Measurement			Max length	Weight kg/m
			D	D_2	D_1		
TMR10	**2**	**4.05**	**10**	**9.0**	**7.5**	**1000**	**0.5**
TMR12	**2**	**3.31**	**12**	**11.0**	**9.5**	**1000**	**0.8**
TMR14	3	4.37	14	12.5	10.5	2000	1.0
TMR16	**3**	**3.77**	**16**	**14.5**	**12.5**	**3000**	**1.3**
TMR18	4	4.55	18	16.0	13.5	3000	1.6
TMR20	**4**	**4.05**	**20**	**18.0**	**15.5**	**3000**	**2.0**
TMR22	5	4.67	22	19.5	16.5	3000	2.3
TMR25	**5**	**4.05**	**25**	**22.5**	**19.5**	**3000**	**3.1**
TMR28	5	3.57	28	25.5	22.5	3000	4.0
TMR32	**6**	**3.77**	**32**	**29.0**	**25.5**	**3000**	**5.2**
TMR36	6	3.31	36	33.0	29.5	3000	6.7
TMR40	**6**	**2.96**	**40**	**37.0**	**33.5**	**3000**	**8.4**
TMR45	8	3.55	45	41.0	36.5	3000	10.4
TMR50	**8**	**3.17**	**50**	**46**	**41.5**	**3000**	**13**

Analogue indicators and hand wheels to suit can also be supplied from stock and make an ideal machine adjuster mechanism.





G



Double Acting Thread

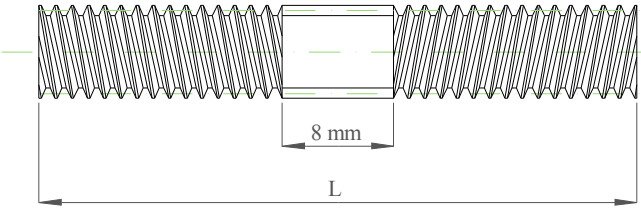

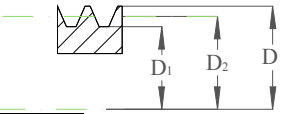

- Material S45C (1045 med tensile)
- Single shaft with left and right hand threads
- Talk to us about non standard lengths and machining

Part No.	Lead P	Lead Angle	Standard Measurement			Max Length	Weight Kg/m
			D	D_2	D_1		
TMC10	2	4'02'46"	10	9.0	7.5	500	0.5
TMC12	2	3'18'44"	12	11.0	9.5	750	0.8
TMC14	3	4'22'07"	14	12.5	10.5	750	1.0
TMC16	3	3'46'04"	16	14.5	12.5	1000	1.3
TMC18	4	4'32'59"	18	16.0	13.5	1000	1.6
TMC20	4	4'02'46"	20	18.0	15.5	1250	2.0
TMC22	5	4'39'58"	22	19.5	16.5	1250	2.3
TMC25	5	4'02'56"	25	22.5	19.5	1500	3.1
TMC28	5	3'34'17"	28	25.5	22.5	1500	4.0
TMC32	6	3'46'04"	32	29.0	25.5	1500	5.2

Flanged Nuts

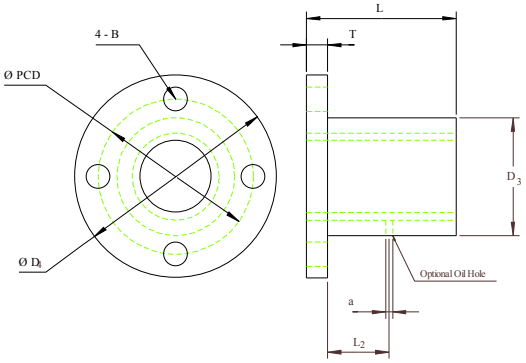

- Available in left and right hand threads
- Material BC6 Bronze
- Optional oil hole (code –O ex TTM25-O)
- Plastic nut available (code –P ex TTMP25)
  - Material Acetal (POM)

Items in **bold** are normal stock items

Part No.	Lead P	Lead Angle	Standard Measurement			D_3	L	D_4	T	PCD	B	a	L_2	Weight	Load Plastic nut	Load BC6 nut
			D	D_2	D_1									kg	Kgf	Kgf
TTM10	**2**	**4.05**	**10.5**	**9.0**	**8.5**	**20**	**24**	**36**	**5**	**26**	**4.3**	**1.5**	9.5	**0.079**	**23**	**260**
TTM12	**2**	**3.31**	**12.5**	**11.0**	**10.5**	**22**	**30**	**44**	5	**31**	**5.4**	**1.5**	12.5	**0.118**	**31**	**400**
TTM14	3	4.37	14.5	12.5	12.5	22	30	44	5	31	5.4	1.5	12.5	0.111	37	500
TTM16	**3**	**3.77**	**16.5**	**14.5**	**13.5**	**28**	**35**	**51**	**6**	**38**	**6.6**	**1.5**	14.5	**0.201**	**52**	**640**
TTM18	4	4.55	18.5	16.0	14.5	32	40	56	6	42	6.6	2	14.5	0.284	71	890
TTM20	**4**	**4.05**	**20.5**	**18.0**	**16.5**	**32**	**40**	**56**	**6**	**42**	**6.6**	**2**	18	**0.266**	**80**	**1000**
TTM22	5	4.67	22.5	19.5	18.0	36	50	61	7	47	6.6	2.5	21.5	0.412	103	1260
TTM25	**5**	**4.05**	**25.5**	**22.5**	**21.0**	**36**	**50**	**61**	**7**	**47**	**6.6**	**2.5**	21.5	**0.370**	**118**	**1440**
TTM28	5	3.57	28.5	25.5	24.0	44	56	76	8	58	9.0	2.5	23	0.671	153	1800
TTM32	**6**	**3.77**	**32.5**	**29.0**	**27.0**	**44**	**56**	**76**	**8**	**58**	**9.0**	**2.5**	23	**0.599**	**176**	**2090**
TTM36	6	3.31	36.5	33.0	31.0	52	60	84	8	66	9.0	3	26	0.865	222	2630
TTM40	**6**	**2.96**	**40.5**	**37.0**	**35.0**	**58**	**70**	**98**	**10**	**76**	**11.0**	**3**	30	**1.321**	**293**	**3240**
TTM45	8	3.55	45.5	41.0	38.0	64	75	104	10	80	11	4	32.5	1.631		4110
TTM50	**8**	**3.17**	**50.5**	**46.0**	**43.0**	**68**	**80**	**109**	**10**	**85**	**11**	**4**	**35**	**1.798**		**5110**

1 kgf = 9.81N



Block Nuts

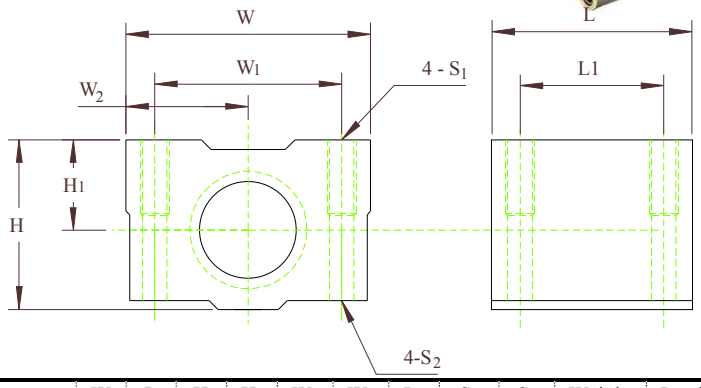

- Available in left and right hand threads
- Material BC6 Bronze
- Optional oil hole

Items in **bold** are normal stock items

Part No.	Lead P	Lead Angle	Standard Measurement D	D_2	D_1	W	L	H	H_1	W_2	W_1	L_1	S_1	S_2	Weight kg	Load Kgf
BTM10	**2**	**4'02'46"**	**10.5**	**9.0**	**8.5**	**30**	**24**	**20**	**10**	**15**	**20**	**16**	**M4**	**3.3**	**0.09**	**260**
BTM12	**2**	**3'18'44"**	**12.5**	**11.0**	**10.5**	**38**	**30**	**22**	**11**	**19**	**26**	**20**	**M5**	**4.3**	**0.15**	**400**
BTM14	3	4'22'07"	14.5	12.5	12.5	38	30	22	11	19	26	20	M5	4.3	0.14	500
BTM16	**3**	**3'46'04"**	**16.5**	**14.5**	**13.5**	**44**	**35**	**28**	**14**	**22**	**32**	**24**	**M5**	**4.3**	**0.26**	**640**
BTM18	4	4'32'59"	18.5	16.0	14.5	48	40	32	16	24	36	28	M6	5.1	0.36	890
BTM20	**4**	**4'02'46"**	**20.5**	**18.0**	**16.5**	**48**	**40**	**32**	**16**	**24**	**36**	**28**	**M6**	**5.1**	**0.35**	**1000**
BTM22	5	4'39'58"	22.5	19.5	18.0	62	50	38	20	31	46	34	M8	6.8	0.64	1260
BTM25	**5**	**4'02'56"**	**25.5**	**22.5**	**21.0**	**62**	**50**	**38**	**20**	**31**	**46**	**34**	**M8**	**6.8**	**0.64**	**1440**
BTM28	5	3'34'17"	28.5	25.5	24.0	68	56	47	25	34	52	40	M8	6.8	1.04	1800
BTM32	**6**	**3'46'04"**	**32.5**	**29.0**	**27.0**	**68**	**56**	**47**	**25**	**34**	**52**	**40**	**M8**	**6.8**	**0.97**	**2090**

1 kgf = 9.81N

Tubular Nuts

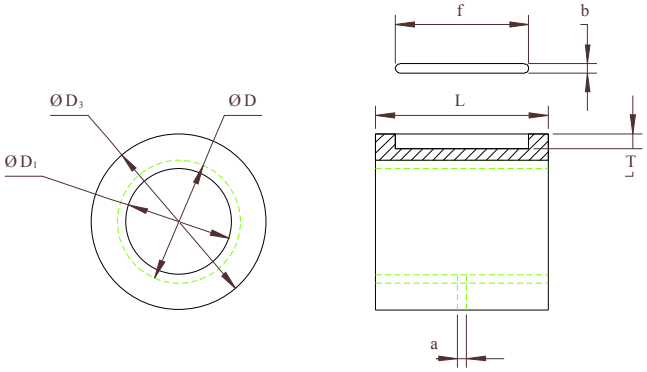

- Available in left and right hand threads
- Material BC6 Bronze
- Optional oil hole
- Also Available with external keyway

Items in **bold** are normal stock items

Part No.	Lead P	Lead Angle	Standard Measurement D	D_2	D_1	D_3	L	a	b	f	T	Weight kg	Load Kgf
STM10	2	4'02'46"	10.5	9.0	8.5	20	20	1.5	4	14	2	0.043	260
STM12	2	3'18'44"	12.5	11.0	10.5	22	22	1.5	4	16	2	0.054	400
STM14	3	4'22'07"	14.5	12.5	12.5	22	22	1.5	4	16	2	0.048	500
STM16	**3**	**3'46'04"**	**16.5**	**14.5**	**13.5**	**28**	**26**	**1.5**	**5**	**18**	**2.5**	**0.100**	**640**
STM18	4	4'32'59"	18.5	16.0	14.5	32	31	2	7	22	2.5	0.160	890
STM20	4	4'02'46"	20.5	18.0	16.5	32	31	2	7	22	2.5	0.145	1000
STM22	5	4'39'58"	22.5	19.5	18.0	36	40	2.5	7	26	2.5	0.245	1260
STM25	**5**	**4'02'56"**	**25.5**	**22.5**	**21.0**	**36**	**40**	**2.5**	**7**	**26**	**2.5**	**0.212**	**1440**
STM28	5	3'34'17"	28.5	25.5	24.0	44	45	2.5	10	32	4	0.388	1800
STM32	**6**	**3'46'04"**	**32.5**	**29.0**	**27.0**	**44**	**45**	**2.5**	**10**	**32**	**4**	**0.330**	**2090**
STM36	6	3'18'44"	36.5	33.0	31.0	52	49	3	12	40	4.5	0.530	2630
STM40	6	2'57'18"	40.5	37.0	35.0	58	57	3	15	42	5	0.762	3240

1 kgf = 9.81N

Square and H Flanged Nuts are also available on request.





Technical data

Approximate Precision

Single Pitch Error	± 0.02
Accumulative Pitch Error	± 0.15/300

Lubrication

Periodic lubrication is necessary due to the sliding contact between nut and shaft. For demanding applications oil ports are recommended for periodic lubrication. Other types required periodic grease or oil lubrication to their screw shafts.

Service Conditions	Proper Lubricant
High Speed, Light Load	Turbine Oil 90
Medium Speed, Medium Load	Turbine Oil 140-180, Lithium Soap Group Grease 2nd Grade
Low Speed, Heavy Load	Lithium Soap Group Grease 2nd-3rd Grade

Sizing trapezoidal threads

Sizing can be done by either the PV value or by the rated thrust load (Kgf) for the nut or the PV value for sliding friction. PV values can be calculated from the following.

P_{max}	Maximum contact pressure = 1kgf/mm^2
PV_{max}	Maximum PV value = 2.5kgf/mm^2 x m/min
F	Thrust load (kgf)
P	Contact surface pressure (kgf/mm^2)
V	Sliding Speed (m/min)
α	Lead angle (deg)
S/2	Contact area (half the contact area of the flank surface)
N	Rotational speed (rpm)
d_o	Pitch circle diameter (mm)
β	Flank angle = 15°
μ	Friction factor (0.1-0.3) With lubrication 0.15 for start 0.1 for operation Without lubrication 0.2 for start, 0.15 during operation

Acting contact surface pressure: P

$$P = F/(S/2) \qquad (kgf/mm^2)$$

Sliding Speed: V

$$V = (\pi \times d_o \times N) / (\cos\alpha \times 10^3) \qquad (m/min)$$

Driving Torque: T

$$T = (F \times d_o/2) \times (\cos\beta \times \tan\alpha + \mu) / (\cos\beta - \mu \tan\alpha) \quad (kgf\,mm)$$

Analogue indicators

An analogue indicator is perfect for mounting to screw shafts to give an measurement of movement. Ideal operator and QA interface for packaging, woodworking, glass, printing, shaping and sheet metal machinery.

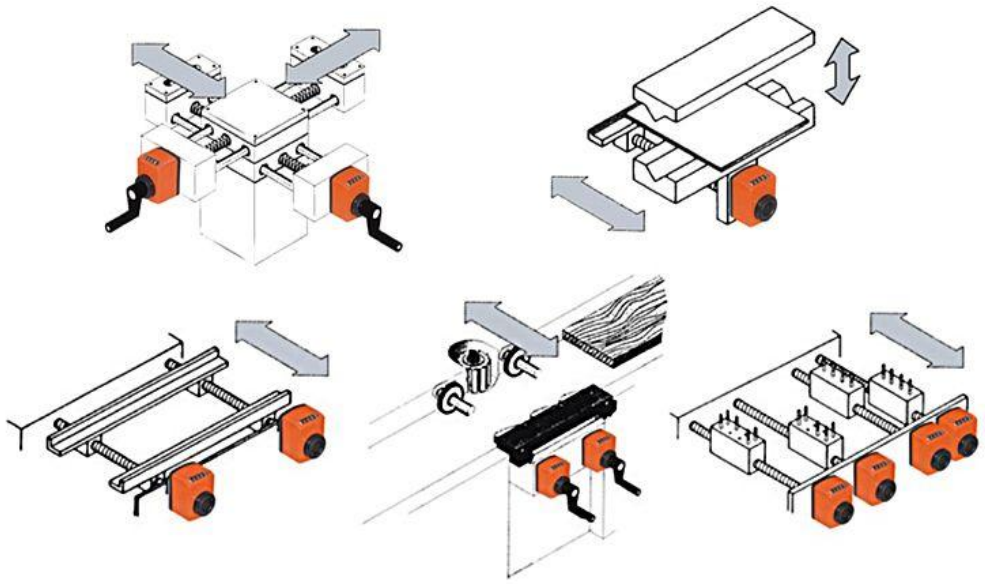

Stocked types are suitable for horizontal eye down (horizontal shaft) and vertical eye down (vertical shaft) mounting and configured to read to 1/10 mm when mounted to stock trapezoidal screw shafts. Indicators on the front face or vertical shaft mount types can be supplied on indent.

SK04





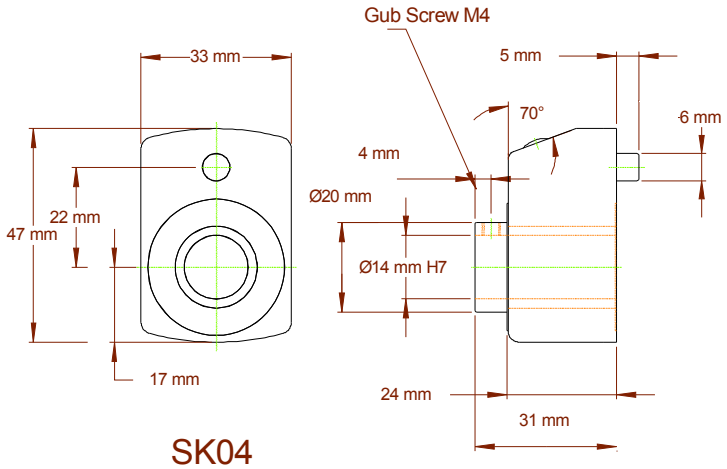

SK04

Code	Orientation (shaft)	Pitch	Bore	Direction	Trap shaft
SK0414-1.0I-14-O	Vertical	1	14	Clockwise	
SK0412-2.0I-8-O	Horizontal	2	8	Clockwise	TMR10
SK0412-2.0I-10-O	Horizontal	2	10	Clockwise	TMR12
SK0414-2.0I-10-O	Vertical	2	10	Clockwise	TMR12
SK0414-3.0I-14-O	Vertical	3	14	Clockwise	TMR16

Stock types above with other types available on request.



SK09





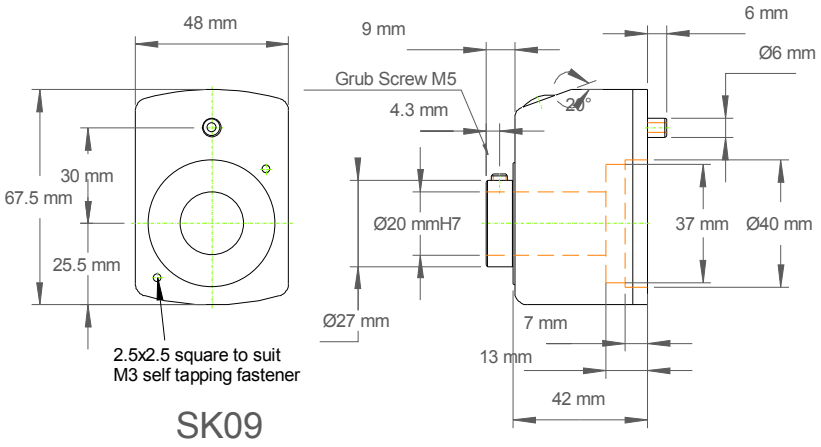

Code	Orientation (shaft)	Pitch	Bore	Direction	Trap shaft
SK0912-3.0I-12-O	Horizontal	3	12	Clockwise	TMR16
SK0912-3.0E-12-O	Horizontal	3	12	Anticlockwise	TMR16
SK0914-3.0I-12-O	Vertical	3	12	Clockwise	TMR16
SK0912-4.0I-15-O	Horizontal	4	15	Clockwise	TMR20
SK0914-4.0I-15-O	Vertical	4	15	Clockwise	TMR20
SK0912-4.0E-15-O	Horizontal	4	15	Anticlockwise	TMR20
SK0912-5.0E-20-O	Horizontal	5	20	Anticlockwise	TMR25
SK0914-5.0I-20-O	Vertical	5	20	Clockwise	TMR25
SK0912-6.0I-20-O	Horizontal	6	20	Clockwise	TMR32
SK0912-6.0E-20-G	Horizontal	6	20	Anticlockwise	TMR32
SK0914-6.0I-20-O	Vertical	6	20	Clockwise	TMR32

Stock types above with other types available on request.

SK10





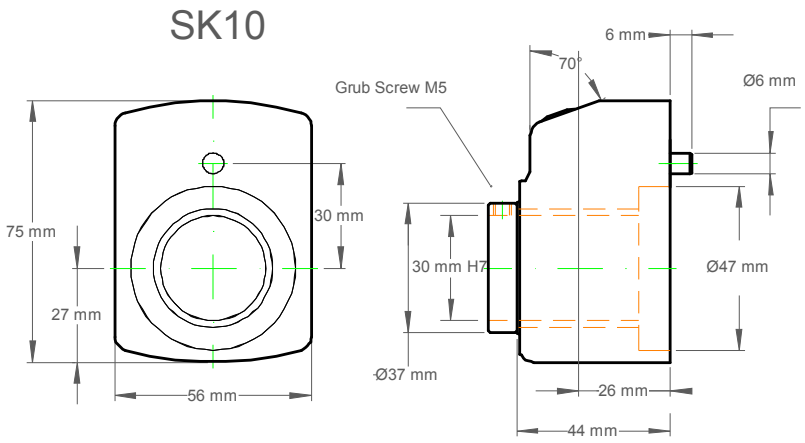

Code	Orientation (shaft)	Pitch	Bore	Direction	Trap shaft
SK1012-5.0I-20-O	Horizontal	5	20	Clockwise	TMR25
SK1012-5.0I-25-O	Horizontal	5	25	Clockwise	TMR25

Stock types above with other types available on request.

Also available large frame SK20 and SK19 low profile version of SK09.

Aluminium Handwheels

A rugged aluminium handwheel with a good looking black powder coated finish. Features a handle that retracts into the face of the rim for a clean safe worker interface. Gives machines a professional ergonomic look.

These handwheels are from stock bored and keyed ready to install.

Part Code	ØD Outside dia	B Bore	k Keyway	H Handle height	ØH Handle dia	W Rim height	V Handle height	l Washer ring	t Rim thickness	F Web thickness
7310-100x12	99	12	4	52	22	20	40	18	10	30
7310-125x12	125	12	4	68	24	22	44	18	12	31
7310-160x16	160	16	5	80	27	24	48	22	12	39
7310-200x18	200	18	6	80	27	27	54	22	12	45

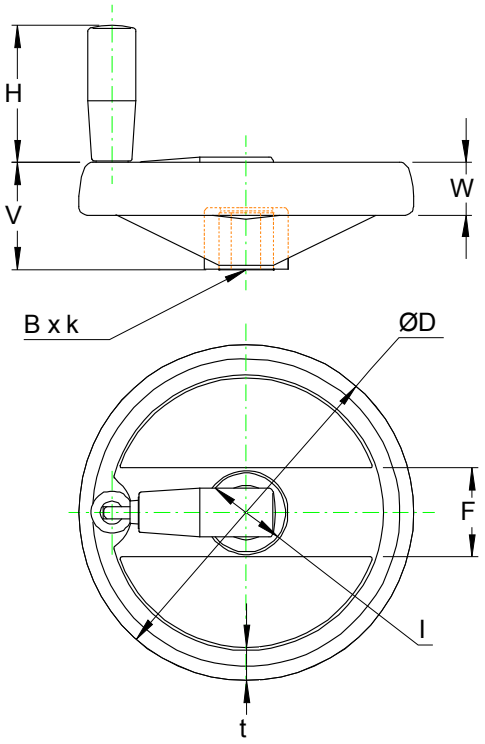





Male and female star knobs and adjustable handles are from stock and are ideal to use as movement locks in manual positioning systems.



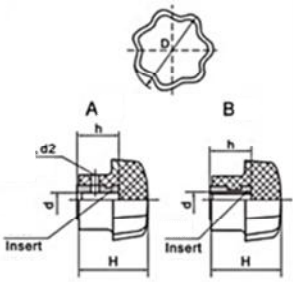

	d	D	H	h	d2
SK7404-A6	M6	32	20	12	2
SK7404-A8	M8	40	25	16	3
SK7404-A10	M10	50	30	20	3
SK7404-A12	M12	65	35	25	3



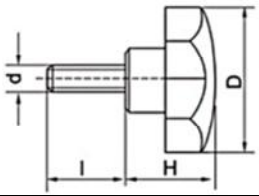

	d	D	l	H
SK7405-6	M6	32	30	20
SK7405-8	M8	40	50	25
SK7405-10	M10	50	50	30
SK7405-12	M12	65	60	35

Adjustable handles in zinc or female plastic with brass insert







Plastic	Zinc	d	D	l	H
	SK7012-M6	M6	50	25	32
SK7015-M8	SK7012-M8	M8	63	25	43
SK7015-M10	SK7012-M10	M10	80	40	50
SK7015-M12	SK7012-M12	M12	95	50	58
	SK7012-M16	M16	114		70

Ballscrews

An ideal drive mechanism where constant motion or high frequency cycling is required. Ballscrews provide highly efficient transmission with low starting torque, smooth running and quiet operation. Recirculating ball construction ensures low friction for smaller drive requirements along with high load capacity.

Ballscrews have many advantages over pneumatic or hydraulic drives including;

- No contamination from leaks
- High rigidity
- Positive direct drive
- High repeatability
- High accuracy
- Energy saving
- Low or even no backlash

Hiwin industrial grade ballscrews are available from stock in New Zealand. Stock leads range from 5 to 40mm to cover a wide range of feed rates. Hiwin are one of the leading linear component manufacturers in the world and can produce an enormous range of rolled or ground ballscrews from 8 to 100mm diameter and to ISO9000.



Ballscrew X-Y retrofits for mills



Rotating Nut ballscrews



High load drive 50 to 350T



Precision ground accuracy to 0.0035mm/300mm

Most types can be supplied as anti-backlash or preloaded version to increase system accuracy and eliminate lost motion. Different types such as cylindrical, double nut and block type are also available.

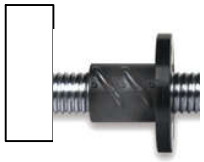

HIWIN®
Linear Motion Products & Technology

Linear Rail System SBC

Hiwin FSI - Standard Lead

This is a standard lead, flanged form, single nut, industrial precision, rolled ballscrew, with internal return tubes. 5 or 10mm leads are suitable for the vast majority of applications.

- These are normally available ex stock
- Stock precision PR3 (±0.1mm/300mm travel)
- Din standard 69051 part 5 form B

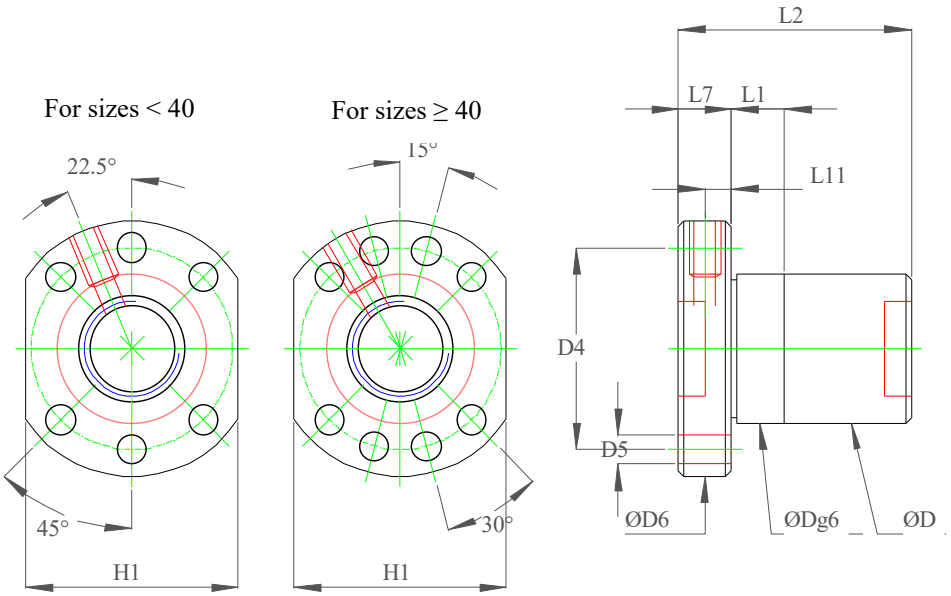

Model	Size		Dynamic Load	Static Load	D	D4	#	D5	D6	H1	L1	L2	L7	L11	M-oil hole	Axial Play
	Nominal Dia	Lead	1 x 10^6 revs, C (kgf)	C_o (kgf)	Boss dia	PCD	Flange holes	fastener dia	OD	Across faces	shoulder width	Length	Flange thickness	nipple position		
16-5T3	**16**	**5**	**664**	**1196**	**28**	**38**	**6**	**5.5**	**48**	**40**	**10**	**44**	**10**	**5**	**M6x1P**	**0.07**
20-5T4	**20**	**5**	**939**	**1993**	**36**	**47**	**6**	**6.6**	**58**	**44**	**10**	**52**	**10**	**5**	**M6x1P**	**0.07**
25-5T4	**25**	**5**	**1127**	**2776**	**40**	**51**	**6**	**6.6**	**62**	**48**	**12**	**52**	**10**	**5**	**M6x1P**	**0.07**
25-10T3	**25**	**10**	**1430**	**2914**	**40**	**51**	**6**	**6.6**	**62**	**48**	**16**	**74**	**10**	**5**	**M6x1P**	**0.12**
32-5T4	**32**	**5**	**1291**	**3697**	**50**	**65**	**6**	**9**	**80**	**62**	**10**	**53**	**12**	**6**	**M6x1P**	**0.07**
32-10T4	**32**	**10**	**2900**	**6404**	**50**	**65**	**6**	**9**	**80**	**62**	**16**	**85**	**12**	**6**	**M6x1P**	**0.15**
40-10T4	**40**	**10**	**3396**	**8489**	**63**	**78**	**8**	**9**	**93**	**70**	**16**	**87**	**14**	**7**	**M8x1P**	**0.15**
50-10K6	**50**	**10**	**7450**	**25350**	**75**	**93**	**8**	**11**	**110**	**85**	**16**	**90**	**16**	**8**	**M8x1P**	**0.15**

1kgf = 9.81N Items in bold type are normal stock lines.

Material specification for FSI and FSH shafts is to cf53 DIN standard;

- Yield strength: 680N/mm^2
- Tensile strength: 840N/mm^2



Hiwin FSH – High Lead

This is a high lead, flanged form factor, single nut, industrial precision, rolled ballscrew, with internal return tubes. The higher lead of this type gives more travel per revolution of the shaft to reduce shaft speeds and reduce whipping of the shaft. These are ideal for faster travel speeds and high cycling mechanisms.

- These are normally available ex stock
- Stock precision PR3 (±0.1mm/300mm travel)

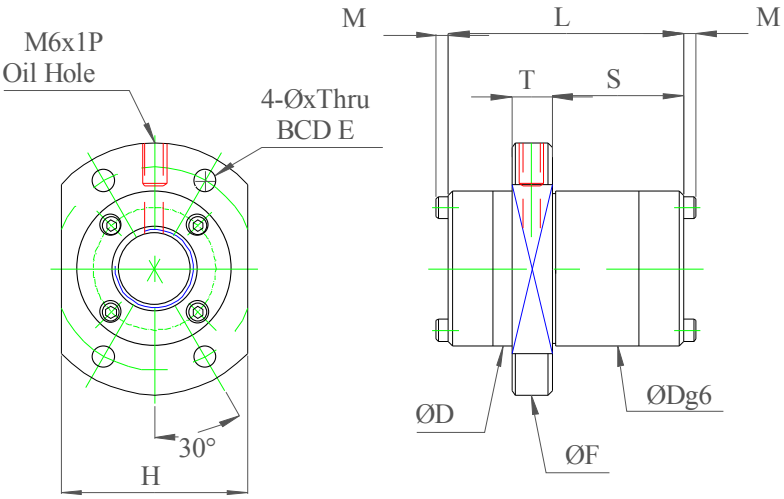

Model	Size		Ball dia	Dynamic Load	Static Load	D	BCD-E	X	F	H	L	T	S	M	M-oil hole	Axial Play
	Nominal Dia	Lead		1x 10^6 revs C (kgf)	C_o (kgf)	Boss dia	PCD	Fastner	OD	Across faces	Length	Flange thickness	Boss length	cap screw length		
16-16S4	**16**	**16**	**3.18**	**1290**	**2760**	**33**	**45**	**6.6**	**58**	**38**	**48**	**10**	**26**	**0**	**M6x1P**	**0.07**
20-20S4	**20**	**20**	**3.18**	**1450**	**3480**	**38**	**50**	**5.5**	**62**	**46**	**58**	**10**	**32.5**	**3**	**M6x1P**	**0.07**
25-25S4	**25**	**25**	**3.97**	**2190**	**5600**	**47**	**60**	**6.6**	**74**	**56**	**67**	**12**	**39.5**	**3**	**M6x1P**	**0.1**
32-32S4	**32**	**32**	**4.76**	**3110**	**8530**	**58**	**74**	**9**	**92**	**68**	**85**	**15**	**48**	**0**	**M6x1P**	**0.12**
40-40S4	**40**	**40**	**6.35**	**5100**	**14330**	**72**	**93**	**11**	**114**	**84**	**102**	**17**	**60**	**0**	**M6x1P**	**0.15**
50-50S4	50	50	7.94	7470	21780	90	112	14	135	104	125	20	83.5	0	M6x1P	0.17

1kgf = 9.81N Items in bold type are normal stock lines.

SBC DIN Standard

SBC use rolled shaft which is one of the highest accuracy rolled ball screw in the world. This is a great way of getting a higher precision at a more attractive price and much shorter lead time than a precision ground screw.

The SDK and SDH type nuts conform to the European DIN standard sizes. Some types are available from stock in NZ in C5 (±0.023mm/300mm). Others types can be supplied on short lead times.

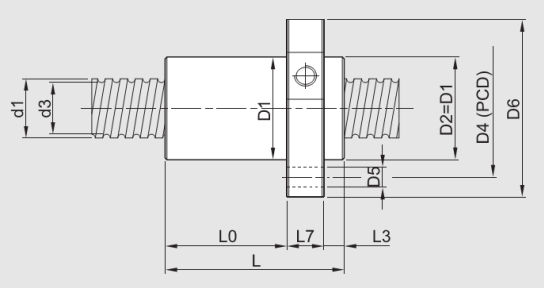

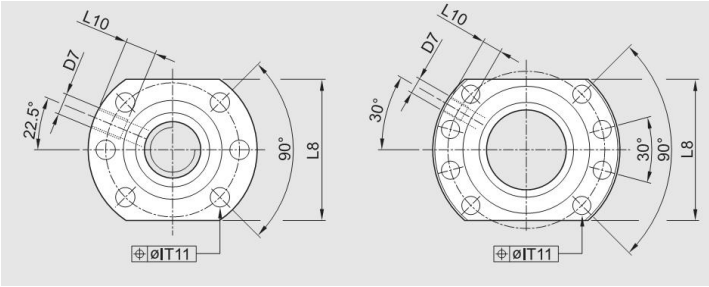

For sizes < 40 For sizes ≥ 40

Model	Ph	d2	Sa	D1 (g6)	D4	D5	D6	L (±1)	L0 (±1)	L3	L7	L8	D7	Ca	Coa
	Lead	Root Dia	Backlash	Boss	PCD	Fastener	Flange OD	Overall Length	Boss Length	(-0.5)		Across faces	Grease Nipple	1x10 6 revs (kN)	(kN)
SDK 1605	5	12.7	0.05	28	38	5.5	48	48.5	33	5.5	10	40	M6x1	9.5	10.9
SDH 1610	10	13.4	0.05	28	38	5.5	48	45	26	9	10	40	M6x1	7	12
SDH 1616	16	13.4	0.05	28	38	5.5	48	48	28	10	10	40	M6x1	7.1	14
SDK 2005	5	16.7	0.05	36	47	6.6	58	48.5	33	5.5	10	44	M6x1	11.5	15.5
SDK 2010	10	16.9	0.05	36	47	6.6	58	69	53	6	10	44	M6x1	13.6	19
SDH 2020	20	16.7	0.05	36	47	6.6	58	54	33	11	10	44	M6x1	10.8	18.6
SDK 2505	5	21.7	0.05	40	51	6.6	62	49	33	6	10	48	M6x1	13.1	20.2
SDK 2510	10	21.7	0.05	40	51	6.6	62	80	64	6	10	48	M6x1	19	38
SDH 2525	25	21.7	0.05	40	51	6.6	62	64	41	11	12	48	M6x1	13.1	26
SDK 3205	5	28.7	0.05	50	65	9	80	57	39	6	12	62	M6x1	19.3	36.3
SDK 3210	10	27.1	0.06	50	65	9	80	73	55	6	12	62	M6x1	26.4	39
SDH 3220	20	27.1	0.06	56	71	9	86	83	57	14	12	68	M6x1	47.2	83.2
SDH 3232	32	28.2	0.06	56	71	9	86	83	54	17	12	68	M6x1	17.2	53.9
SDK 4005	5	36.7	0.06	63	78	9	93	66	45	7	14	70	M8x1	26.3	59.2
SDK 4010	10	34	0.06	63	78	9	93	88.5	67.5	7	14	70	M8x1	64.9	109
SDH 4020	20	35.2	0.06	63	78	9	93	83	56	13	14	70	M8x1	52.2	103.6
SDH 4040	40	34	0.06	70	85	9	100	102	67	21	14	77	M8x1	59.7	108.9
SDK 5010	10	43	0.06	75	93	11	110	92	69	7	16	85	M8x1	66.4	134.3
SDH 5020	20	44.6	0.06	75	93	11	110	85	56	13	16	85	M8x1	78.8	188.7
SDK 6310	10	56.9	0.06	90	108	11	125	103.5	78.5	7	18	95	M8x1	93.8	229.7
SDH 6320	20	56.9	0.06	95	115	13.5	135	92	48	24	20	100	M8x1	103.1	270.8
SDK 8010	10	73.9	0.06	105	125	13.5	145	121	92	9	20	110	M8x1	121.9	374.9
SDH 8020	20	73.7	0.06	125	145	13.5	165	154	129	-	25	130	M8x1	83.2	302.9

1kgf = 9.81N Ca = dynamic load capacities, Coa = static load capacities



SBC MBS – Miniature

SBC also offer a range of miniature ball screws for case where space and/or ultra-fine leads are required. These are available from the factory on short lead times.

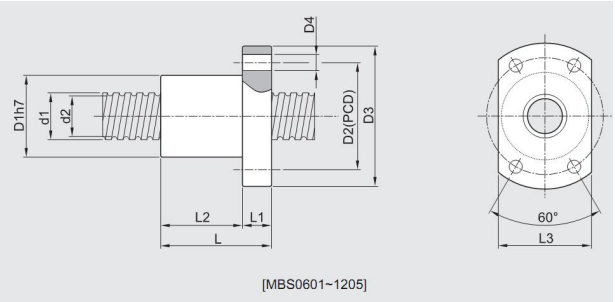

Model	Circuits	Root dia	Lead	Ball size	C_a 1x10 ^{6} revs (kN)	C_{ao} (kN)	D1 Boss dia	D3 OD	L Overal length	L1 Flange thickness	L2 Boss length	D2 PCD	L3 Across faces	D4 Fastener
MBS0601	3x1	5.5	1	0.8	73	121	13	27	15	3.5	11.5	21.5	17	3.4
MBS0801	4x1	7.4	1	0.8	93	173	16	30	16	4	12	24	18	3.4
MBS0802	3x1	7.2	2	1.2	135	225	16	30	16	4	12	24	18	3.4
MBS0802.5	2.5x1	7.2	2.5	1.2	151	232	20	38	21	5	16	30	23	4.5
MBS1002	3x1	8.4	2	2	183	305	18	35	28	5	23	27	22	4.5
MBS1004	3x1	8.6	4	2	394	589	26	46	34	10	24	36	28	4.5
MBS1204	3.5x1	10	4	2.381	425	738	28	48	30	6	24	39	30	5.5
MBS1205	3.5x1	10.4	5	2	662	1036	28	48	35	6	29	39	30	5.5
MBS1210	2x1	10	10	2	255	366	30	45	40	10	30	40	32	4.5

1kgf = 9.81N Ca = dynamic load capacities, Coa = static load capacities

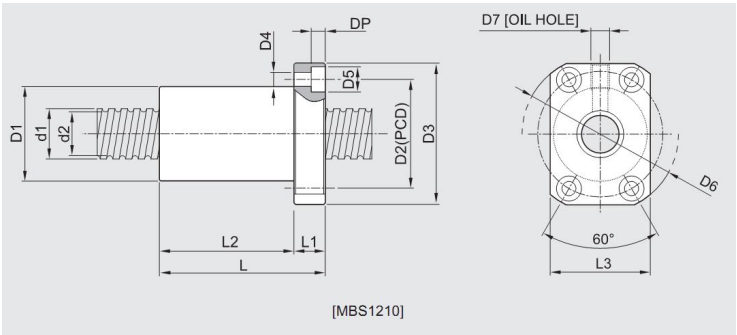

Ballscrew actuators and stages

SBC and Hiwin manufacture ballscrew actuators and stages ready to bolt in to a wide range of applications. Open frame, bellows and fully sealed clean room types can be supplied on short lead times.

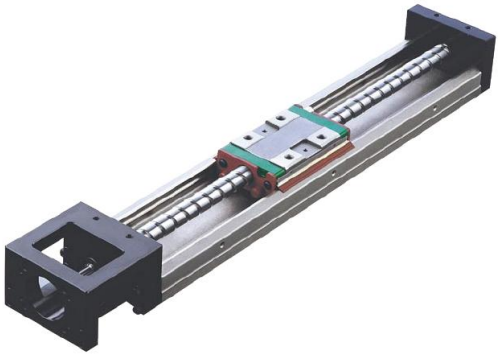

Hiwin KK type integrated guide– optional bellows

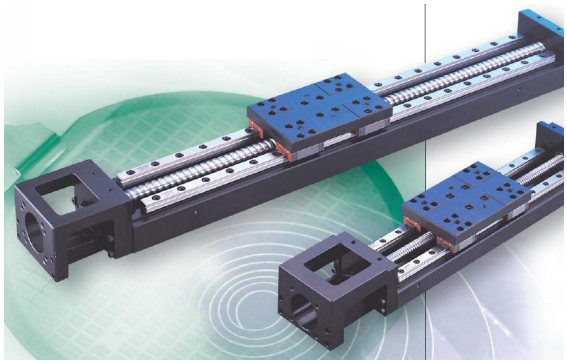

Hiwin KA type profile guide type



Hiwin KS type – clean room class



Hiwin integrated linear motor stages. Also available in XY and gantry configurations.



SBC Ballscrew clean room class actuator



SBC also manufacture high load precision cross roller guides and tables. Ideal for miniature precision applications, robot grippers, and semiconductor handling.



J

Shaft support units

A range of flanged and block type screw shaft supports that save time and money designing and machining parts to hold shaft bearings. These units allow for easy mounting of screw shafts to bulkheads or base plates. SBC can also offer the blocks with corrosion resistant Raydent treatment.

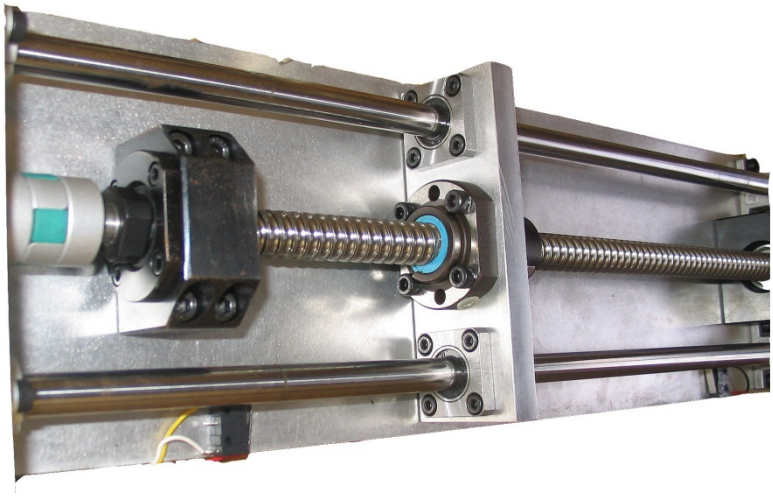

BK/FK types have angular contact bearings for rigid mounting of the driven end and support of thrust and radial loads. This end should be placed between the shaft and the motor driven end to eliminate reflected loads on motors, pulleys and couplings. Fixed supports come complete with precision lock nut.

BF/FF types have a simple radial bearing and are designed to allow a degree of axial play. This avoids compressive loading on the shaft and reduces the risk of buckling the screw shaft.

- Recommended shaft machining drawings can be provided on request.
- Bearings are preloaded and suitable for ball screws down to C3 precision (0.013/300mm) and have Japanese NSK bearings.
- Supports down to 6mm journals can be supplied on indent



Fixed shaft supports

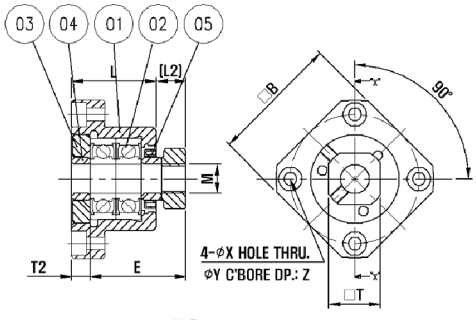

Assemble method "B"

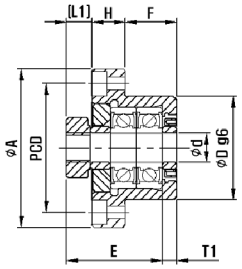

Assemble method "A"

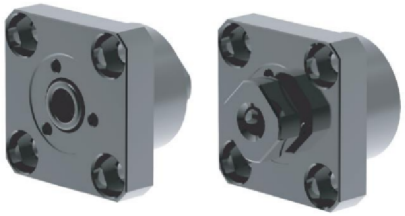

Part	Name	Q'ty
1	Housing	1
2	Bearing(*1)	2
3	Pressure plate	1
4	collar	2
5	Seal	2
6	Lock nut	1

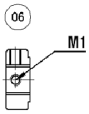

Model no.	Φd	L	H	F	E	ΦD g6	A	PCD	B	"A" Type L1	"A" Type T1	"B" Type L2	"B" Type T2	ΦX	ΦY	Z	M	M1	T	Weight
FK05	5	16.5	6	10.5	18.5	20	34	26	26	5.5	3.5	5	3	3.4	6.5	4	M5x0.5	M3	11	0.08
FK06	5	20	7	13	22	22	36	28	28	5.5	3.5	6.5	4.5	3.4	6.5	4	M6x0.75	M3	12	0.1
FK08	**8**	**23**	**9**	**14**	**26**	**28**	**43**	**35**	**35**	**7**	**4**	**8**	**5**	**3.4**	**6.5**	**4**	**M8x1**	**M3**	**14**	**0.15**
FK10	**10**	**27**	**10**	**17**	**29.5**	**34**	**52**	**42**	**42**	**7.5**	**5**	**8.5**	**6**	**4.5**	**8**	**4**	**M10x1**	**M3**	**16**	**0.23**
FK12	**12**	**27**	**10**	**17**	**29.5**	**36**	**54**	**44**	**44**	**7.5**	**5**	**8.5**	**6**	**4.5**	**8**	**4**	**M12x1**	**M4**	**19**	**0.25**
FK15	**15**	**32**	**15**	**17**	**36**	**40**	**63**	**50**	**52**	**10**	**6**	**12**	**8**	**5..5**	**9.5**	**5**	**M15x1**	**M4**	**22**	**0.39**
FK17	17	45	22	23	47	50	77	62	61	11	9	14	12	6.6	11	10	M17x1	M4	24	0.81
FK20	**20**	**52**	**22**	**30**	**50**	**57**	**85**	**70**	**68**	**8**	**10**	**12**	**14**	**6.6**	**11**	**10**	**M20x1**	**M4**	**30**	**1.02**
FK25	**25**	**57**	**27**	**30**	**59**	**63**	**98**	**80**	**79**	**13**	**10**	**20**	**17**	**9**	**15**	**13**	**M25x1.5**	**M5**	**35**	**1.48**
FK30	**30**	**60**	**30**	**32**	**61**	**75**	**117**	**95**	**93**	**11**	**12**	**17**	**18**	**11**	**17.5**	**15**	**M30x1.5**	**M6**	**40**	**2.32**

Normal stock items in bold type

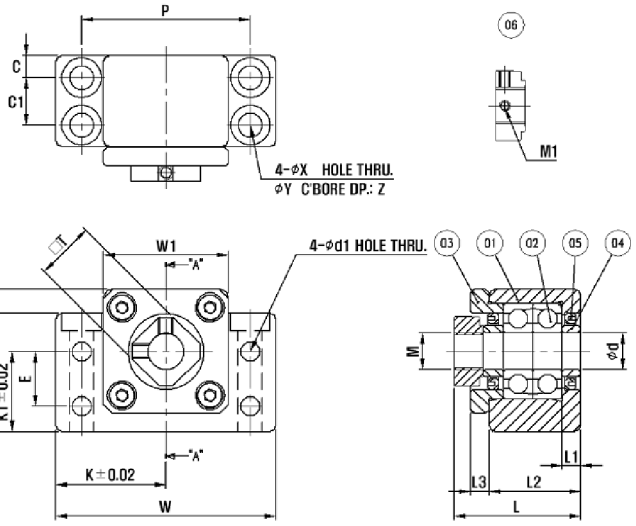



Part no.	Name	Q'ty
1	Housing	1
2	Bearing(*1)	2
3	Pressure plate	1
4	collar	2
5	Seal	2
6	Lock nut	1

Model no.	Φd	W	W1	H	H1	K	K1	L	L1	L2	L3	P	C	C1	ΦX	ΦY	Z	E	Φd1	T	M	M1	Weight
BK10	**10**	**60**	**34**	**39**	**32.5**	**30**	**22**	**34.5**	**5**	**25**	**5**	**46**	**13**	**6**	**6.6**	**10.8**	**5**	**15**	**5.5**	**16**	**M10x1**	**M3**	**0.4**
BK12	**12**	**60**	**34**	**43**	**32.5**	**30**	**25**	**34.5**	**5**	**25**	**5**	**46**	**13**	**6**	**6.6**	**10.8**	**1.5**	**18**	**5.5**	**19**	**M12x1**	**M4**	**0.41**
BK15	**15**	**70**	**40**	**48**	**38**	**35**	**28**	**38**	**6**	**27**	**6**	**54**	**15**	**6**	**6.6**	**11**	**6.5**	**18**	**5.5**	**22**	**M15x1**	**M4**	**0.58**
BK17	**17**	**86**	**50**	**64**	**55**	**43**	**39**	**51**	**7**	**35**	**9**	**68**	**19**	**8**	**9**	**14**	**8.5**	**28**	**6.6**	**24**	**M17x1**	**M4**	**1.3**
BK20	**20**	**88**	**52**	**60**	**50**	**44**	**34**	**51**	**8**	**35**	**8**	**70**	**19**	**8**	**9**	**14**	**8.5**	**22**	**6.6**	**30**	**M20x1**	**M4**	**1.2**
BK25	**25**	**106**	**64**	**80**	**70**	**53**	**48**	**63**	**9**	**42**	**12**	**85**	**22**	**10**	**11**	**17**	**11**	**33**	**9**	**35**	**M25x1.5**	**M6**	**2.35**
BK30	**30**	**128**	**76**	**89**	**78**	**64**	**51**	**70**	**9**	**45**	**14**	**102**	**23**	**11**	**14**	**20**	**13**	**33**	**11**	**40**	**M30x1.5**	**M6**	**3.33**
BK35	35	140	88	96	79	70	52	79	12	50	14	114	26	12	14	20	13	35	11	50	M35x1.5	M6	4.4
BK40	**40**	**160**	**100**	**110**	**90**	**80**	**60**	**91**	**15**	**61**	**18**	**130**	**33**	**14**	**18**	**26**	**17.5**	**37**	**14**	**50**	**M40x1.5**	**M6**	**6.8**

Normal stock items in bold type

Shaft machining details for fixed supports

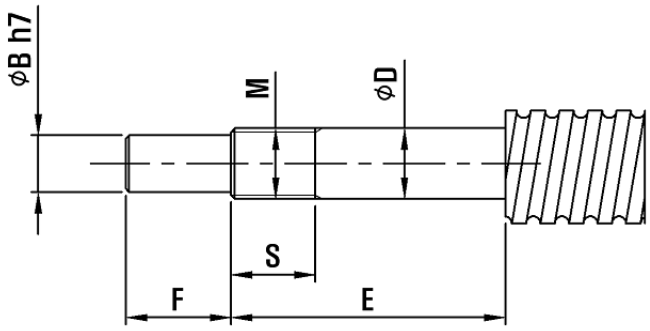

Model no.				Screw shaft diameter	D	B	E	F	M	S	Collar length
FK05	-	-	-	Φ8	5	4	23	6	M5x0.75	7	3.5
FK06	EK06	-	-	Φ8	6	4	28	8	M6x0.75	10	5
FK08	EK08	-	-	Φ10, Φ12	8	6	33	9	M8x1	10	5.5
-	-	BK10	-	Φ12, Φ14, Φ15	10	8	40	15	M10x1	16	5.5
FK10	EK10	-	AK10	Φ12, Φ14, Φ15	10	8	36	15	M10x1	11	5.5
-	-	BK12	-	Φ14, Φ15, Φ16	12	10	39	15	M12x1	14	5.5
FK12	EK12	-	AK12	Φ14, Φ15, Φ16	12	10	36	15	M12x1	11	5.5
-	-	BK15	-	Φ18, Φ20	15	12	40	20	M15x1	12	6
FK15	EK15	-	AK15	Φ18, Φ20	15	12	49	20	M15x1	13	10
-	-	BK17	-	Φ20, Φ25	17	15	53	23	M17x1	17	7
FK17	-	-	-	Φ20, Φ25	17	15	59	23	M17x1	16	10
-	-	BK20	-	Φ25, Φ28	20	17	53	25	M20x1	15	8
FK20	EK20	-	AK20	Φ25, Φ28	20	17	64	25	M20x1	16	11
-	-	BK25	-	Φ32, Φ36	25	20	64	30	M25x1.5	18	9
FK25	-	-	AK25	Φ32, Φ36	25	20	76	30	M25x1.5	20	14
-	-	BK30	-	Φ36, Φ40	30	25	72	38	M30x1.5	25	9
FK30	-		-	Φ36, Φ40	30	25	72	38	M30x1.5	25	9
-	-	BK35	-	Φ45	35	30	83	45	M35x1.5	28	12
-	-	BK40	-	Φ50	40	35	98	50	M40x1.5	35	15

Bearing ratings

Model No.	Bearing	Cr (kN)	Cro (kN)	Max speed (rpm)
FK06, EK06	706A	2.28	0.93	85000
FK08, EK08	708A	3.75	1.66	67000
BK10, FK10. EK10. AK10	7000A	4.05	2	56000
EK12, FK12, EK12, AK12	7001A	4.55	2.5	50000
BK15, FK15, EK15, AK15	7002A	6	3.25	43000
BK17, FK17	7203A	10.4	5.6	36000
BK20	7004A	10	5.7	32000
EK20, FK20. AK20	7204A	14	7.8	30000
BK25, FK25, AK25	7205A	15	14	26000
BK30, FK30	7206A	22	13.5	22000
BK35	7207B	27.1	18.4	9300
BK40	7208B	32	23	8300

Cr : Basic dynamic load rating ($1x10^6$ revs)

Cro : Basic static load rating

1kN = 101 kgf

Free shaft supports

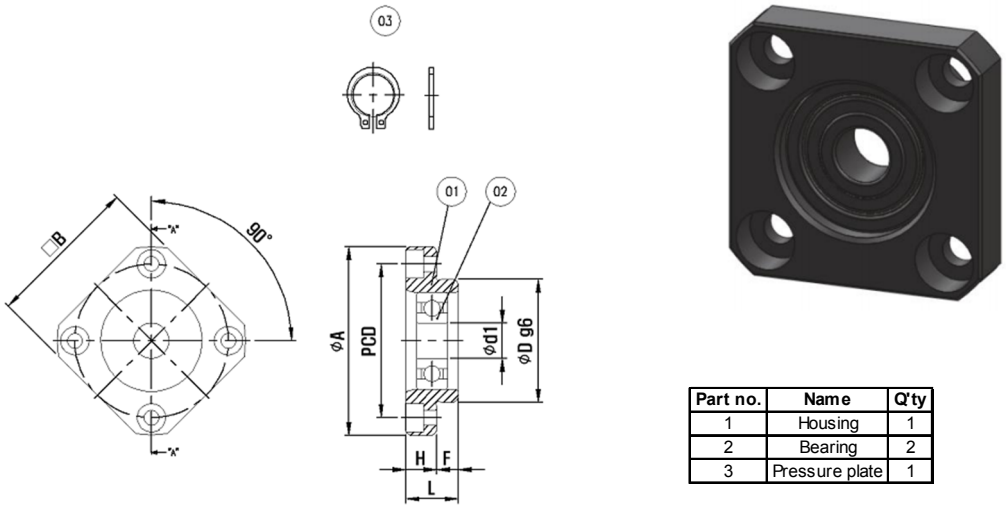

Part no.	Name	Q'ty
1	Housing	1
2	Bearing	2
3	Pressure plate	1

Model no.	Φd	ΦA	B	L	H	F	ΦD g6	PCD	ΦX	ΦY	Z	Weight
FF08	**6**	**36**	**28**	**10**	**6**	**4**	**22**	**28**	**3.4**	**6.5**	**4**	**0.06**
FF10	8	43	35	12	7	5	28	35	3.4	6.5	4	0.1
FF12	**10**	**52**	**42**	**15**	**7**	**8**	**34**	**42**	**4.5**	**8**	**4**	**0.13**
FF15	**15**	**63**	**52**	**17**	**9**	**8**	**40**	**50**	**5.5**	**9.5**	**5.5**	**0.2**
FF17	17	77	61	20	11	9	50	62	6.6	11	6.5	0.33
FF20	**20**	**85**	**68**	**20**	**11**	**9**	**57**	**70**	**6.6**	**11**	**6.5**	**0.43**
FF25	**25**	**98**	**79**	**24**	**14**	**10**	**63**	**80**	**9**	**14**	**85**	**0.66**
FF30	**30**	**117**	**93**	**27**	**18**	**9**	**75**	**95**	**11**	**17**	**11**	**1.03**

Normal stock items in bold type

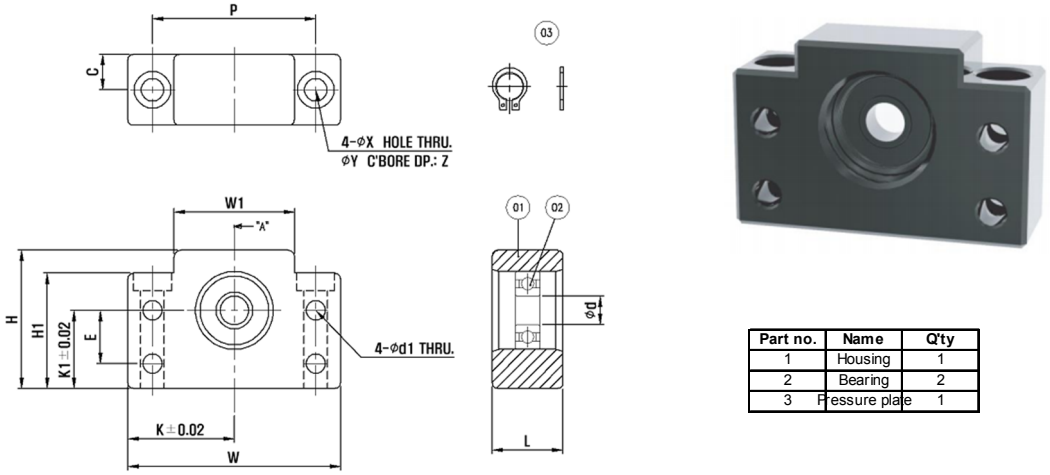

Part no.	Name	Q'ty
1	Housing	1
2	Bearing	2
3	Pressure plate	1

Model no.	Φd	W	W1	K	K1	H	H1	E	Φd1	L	P	C	ΦX	ΦY	Z	Weight
BF10	**8**	**60**	**34**	**30**	**22**	**39**	**32.5**	**15**	**5.5**	**20**	**46**	**10**	**6.6**	**10.8**	**5**	**0.3**
BF12	**10**	**60**	**34**	**30**	**25**	**43**	**32.5**	**18**	**5.5**	**20**	**46**	**10**	**6.6**	**10.8**	**1.5**	**0.3**
BF15	**15**	**70**	**40**	**35**	**28**	**48**	**38**	**18**	**5.5**	**20**	**54**	**10**	**6.6**	**11**	**6.5**	**0.4**
BF17	**17**	**86**	**50**	**43**	**39**	**64**	**55**	**28**	**6.6**	**23**	**68**	**11.5**	**9**	**14**	**8.5**	**0.75**
BF20	**20**	**88**	**52**	**44**	**34**	**60**	**50**	**22**	**6.6**	**26**	**70**	**13**	**9**	**14**	**8.5**	**0.76**
BF20H	20	88	52	44	48	74	64	-	-	26	70	13	9	14	8.5	1.02
BF25	**25**	**106**	**64**	**53**	**48**	**80**	**70**	**33**	**9**	**30**	**85**	**15**	**11**	**17**	**11**	**1.43**
SF25	25	128	76	64	51	89	78	-	-	32	102	16	14	20	13	-
BF30	**30**	**128**	**76**	**64**	**51**	**89**	**78**	**33**	**11**	**32**	**102**	**16**	**14**	**20**	**13**	**1.94**
BF35	**35**	**140**	**88**	**70**	**52**	**96**	**79**	**35**	**11**	**32**	**114**	**16**	**14**	**20**	**13**	**2.25**
SF40	40	140	88	70	52	96	79	-	-	32	114	16	14	20	13	-
BF40	**40**	**160**	**100**	**80**	**60**	**110**	**90**	**37**	**14**	**37**	**130**	**18.5**	**18**	**26**	**17.5**	**3.3**

Normal stock items in bold type

Shaft machining for free supports.

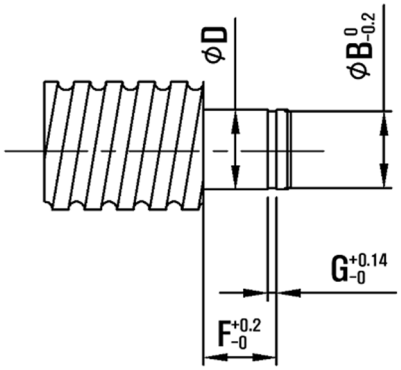

Model no.				Screw shaft diameter	D	E	B	F	G
FF06	EF06	-	-	Φ8	6	9	5.7	6.8	0.8
-	EF08	-	-	Φ10	6	9	5.7	6.8	0.8
FF10	EF10	BF10	AF10	Φ12, Φ14, Φ15	8	10	7.6	7.9	0.9
FF12	EF12	BF12	AF12	Φ14, Φ15, Φ16	10	11	9.6	9.15	1.15
FF15	EF15	BF15	AF15	Φ18, Φ20	15	13	14.3	10.15	1.15
FF17	-	BF17	-	Φ20, Φ25	17	16	16.2	13.15	1.15
-	-	BF20	-	Φ25, Φ28, Φ30	20	16	19	13.35	1.35
FF20	EF20	-	AF20	Φ25, Φ28, Φ30	20	19	19	15.35	1.35
FF25	-	BF25	AF25	Φ30, Φ32, Φ36	25	20	23.9	16.35	1.35
FF30	-	BF30	-	Φ36, Φ40	30	21	28.6	17.75	1.75
-	-	BF35	-	Φ40, Φ45	35	22	33	18.75	1.75
-	-	BF40	-	Φ50	40	23	38	19.95	1.95

Bearing ratings

Model No.	Bearing	C (kN)	Co (kN)	Max speed (rpm)
FF06, EF06	606ZZ	1.95	0.83	95000
FF08, EF08	606ZZ	1.95	0.83	95000
BF10, FF10, EF10, AF10	608ZZ	3.45	1.37	75000
EF12, FF12. EF12. AF12	6000ZZ	4.75	1.96	67000
BF15, FF15. EF15. AF15	6002ZZ	5.85	2.85	50000
BF17, FF17	6203ZZ	9.95	4.75	38000
BF20, EK20, FK20, AK20	6004ZZ	9.95	5	38000
BF25, FF25. AF25	6205ZZ	14.8	7.8	28000
BF30, FF30	6206ZZ	20.3	11.2	24000
BF35	6207ZZ	27	15.3	20000
BF40	6208ZZ	32.5	19	18000

Cr : Basic dynamic load rating ($1x10^6$ revs)

Cro : Basic static load rating

1kN = 101 kgf

Other types

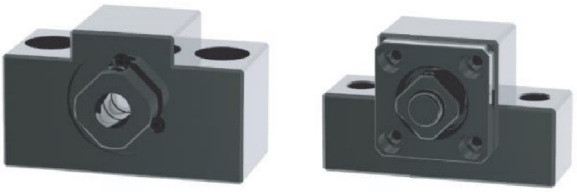

EK

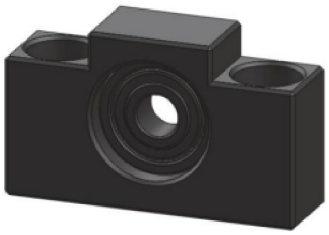

EF



AK

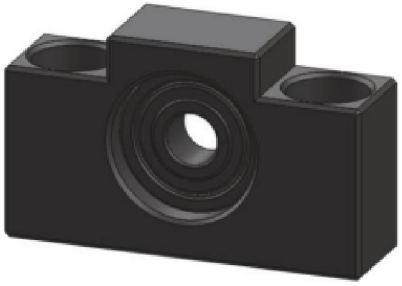

AF



Hiwin WBK

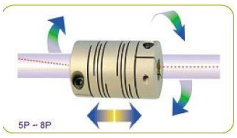

Precision Couplings

A shaft coupling is a critical element in a robust and durable linear shaft drive. Misalignment of motor and drive shafts can cause loss of precision, noise and premature failure. By using a precision coupling shaft misalignment can be overcome without loss of precision. Choosing a shaft coupling requires consideration of a number of factors. The type of coupling to choose depends on the type of misalignment expected in the application and the precision required.

Amount of Backlash

When precise positioning is required backlash of the coupling must be reduced as much as possible. One piece or bolted together couplings of are backlash free but also transmit misalignments to bearings, shafts, motors and gearboxes causing premature failure.

Torsional Stiffness

Soft couplings have elastomeric (plastic or rubber) elements and are generally lower cost. These couplings may flex up to 5° at rated torque lowering precision and system response. Metal couplings are the stiffest.

Reducing Backlash / Increasing Rigidity
Jaw Coupling
Precision Jaw
Oldham
Helical Beam
Disc coupling

Types of Misalignment

Angular	**Parallel**	**End Play**
This is where the angular axis of the two shafts are at an angle to each other.	Where one shaft is offset in a parallel sense is described as radial misalignment. Good applications may have values in the faction of mm.	This is where the position of one shaft to the other along the length of the shaft can vary. In practice this can be caused by temperature changes due to environment and machine operation.
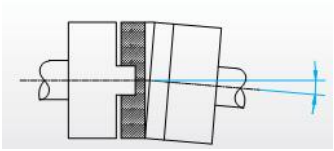	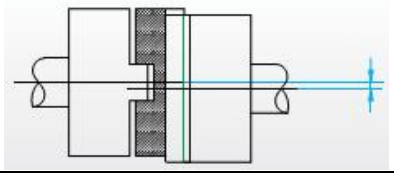	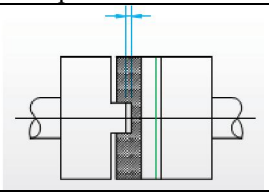

Increasing misalignment ability
Jaw Coupling
Precision Jaw
Oldham
Helical Beam

Mechanical and Electrical isolation

The various couplings exhibit differing behaviour under mechanical or electrical stress. Three-piece couplings with plastic intermediate members offer electrical isolation of the moving carriage. This can reduce the potential for electrical damage to motors.

Oldham and helical beam couplings have the added benefit of acting as a mechanical fuse with the complete elimination of motion on failure of the coupling due to impact.

Helical Beam Couplings



- High rigidity
- Mechanical fuse
- High miss alignment

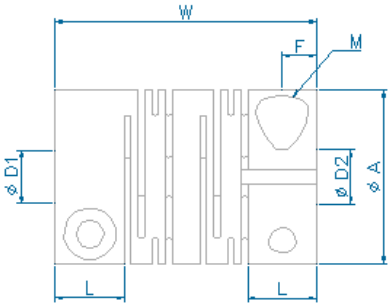

PRODUCT CODE	DIMENSION(mm)					Weight	Moment of inertia	Max ·RPM	Rated Torque	Max Torque	Torsional Stiffness	Error of Misalignment		
	A	L	W	F	M	(g)	(kg·m2)	(Min-1)	(N·m)	(N·m)	(N·m/rad)	Angle (°)	Parallel (mm)	End-Play (mm)
SRB-12C	12.7	5	19	2.5	2	3.8	8×10-7	12000	0.2	0.4	36	2.5 °	0.1	0.3
SRB-16C	**16**	**6.1**	**21.5**	**3.05**	**2.6**	**8.5**	**3.1×10-7**	**12000**	**0.4**	**0.8**	**65**	**2.5 °**	**0.15**	**0.3**
SRB-19C	19.1	6.1	23	3.05	2.6	12	6.5×10-6	9500	0.6	1.2	140	2.5 °	0.15	0.4
SRB-22C	**22.2**	**7.2**	**26.5**	**3.55**	**3**	**19**	**1.4×10-6**	**8500**	**1**	**2**	**170**	**2.5 °**	**0.15**	**0.4**
SRB-26C	26.2	7.4	31.4	3.7	3	33	3.2×10-6	7500	1.5	3	240	2.5 °	0.2	0.5
SRBA-32C	31.8	9.4	39	4.7	4	60	9.1×10-5	6500	2.6	5.2	400	2.5 °	0.2	0.5
SRBB-32C	**31.8**	**9.4**	**44**	**4.7**	**4**	**68**	**1.1×10-5**	**6000**	**2.6**	**5.2**	**380**	**2.5 °**	**0.25**	**0.5**
SRBA-39C	**39**	**10.5**	**43**	**5.35**	**5**	**95**	**2.2×10-5**	**5000**	**6.5**	**13**	**520**	**2.5 °**	**0.25**	**0.5**
SRBB-39C	**39**	**16**	**56**	**5.35**	**5**	**135**	**3.1×10-5**	**4100**	**6.5**	**13**	**460**	**2.5 °**	**0.25**	**0.5**
SRBA-49C	49	15	63.5	7.5	6	260	8.4×10-5	3200	13	26	750	2.5 °	0.25	0.5
SRBB-49C	**49**	**15**	**70**	**7.5**	**6**	**270**	**8.8×10-5**	**3200**	**13**	**26**	**700**	**2.5 °**	**0.25**	**0.5**
SRBA-60C	60	19	76.2	9.35	8	440	2.5×10-4	2600	24	48	1000	2.5 °	0.25	0.5
SRBB-60C	60	19	88	9.35	8	520	3.0×10-4	2600	24	48	980	2.5 °	0.3	0.5

Types in bold are stocked in smallest bore for each size

Bore feasibility

PRODUCT NUMBER	(D1D2)INNER Diameter(mm)															
	ø3	ø4	ø5	ø6	ø8	ø10	ø11	ø12	ø14	ø15	ø16	ø18	ø19	ø20	ø22	ø24	ø25
SRB-12C																	
SRB-16C																	
SRB-19C																	
SRB-22C																	
SRB-26C																	
SRBA-32C																	
SRBB-32C																	
SRBA-39C																	
SRBB-49C																	
SRBB-60C																	

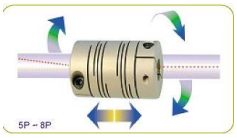

Oldham Couplings – our most popular



- Electrically isolating
- Mechanical fuse
- Replaceable insert
- High parallel miss alignment

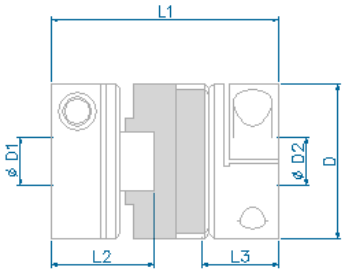

PRODUCT NUMBER	DIMENSION(±0.3)				Bolt	Weight	Max Torque	Rated Torque	Torsional Stiffness	Moment of Inertia	Max ·RPM	Error of Misalignment		
	D	L 1	L 2	L 3	M	(gr)	(N·m)	(N·m)	(N·m/rad)	($kg·m^2$)	(Min^{-1})	Angle (°)	Parallel (mm)	End Play (mm)
SOH-16C	**16**	**23.6**	**11**	**11**	**M2.6**	**10**	**2**	**1**	**65**	**$3.7×10^{-7}$**	**8,000**	**2°**	**1**	**0.1**
SOH-16SC	16	21	8	11	M3	7.5	2	1	65	$2.9×10^{-7}$	8,000	2°	1	0.1
SOHM-16C	16	21	9.5	9.5	M2.6	9	2	1	65	$3.2×10^{-7}$	8,000	2°	1	0.1
SOH-20C	**20**	**25.5**	**11.8**	**11.8**	**M2.6**	**16**	**3**	**1.5**	**120**	**$9.3×10^{-7}$**	**7,000**	**2°**	**1.5**	**0.1**
SOH-20SC	20	22.8	8.9	11.8	M4	15.5	3	1.5	120	$9.0×10^{-7}$	7,000	2°	1.5	0.1
SOHM-20C	20	22.5	10	10	M2.6	14	3	1.5	120	$8.2×10^{-7}$	7000	2°	1.5	0.1
SOH-25C	**25.5**	**32**	**14.8**	**14.8**	**M3**	**34**	**5**	**2.5**	**200**	**$3.3×10^{-6}$**	**6000**	**2°**	**2**	**0.1**
SOH-25SC	25.5	28.8	11.6	14.8	M4	27	5	2.5	200	$2.6×10^{-6}$	6000	2°	2	0.1
SOHM-25C	25.5	27	12	12	M3	27	5	2.5	200	$2.6×10^{-6}$	6000	2°	2	0.1
SOH-32C	**32**	**45**	**21**	**21**	**M4**	**80**	**14**	**7**	**620**	**$1.3×10^{-5}$**	**4800**	**2°**	**3**	**0.2**
SOH-32SC	32	38.5	21	14.5	M5	70	14	7	620	$1.1×10^{-5}$	4800	2°	2.5	0.2
SOHM-32C	32	35	16	16	M4	52	14	7	620	$8.3×10^{-6}$	4800	2°	2.5	0.2
SOH-43C	**43**	**52**	**24**	**24**	**M5**	**160**	**30**	**15**	**1200**	**$4.3×10^{-5}$**	**4000**	**2°**	**3**	**0.2**
SOHM-43C	43	47	21.2	21.2	M5	132	30	15	1200	$2.0×10^{-5}$	4000	2°	3	0.2
SOH-53C	**53**	**58**	**19.5**	**19.5**	**M5**	**252**	**50**	**25**	**1400**	**$1.0×10^{-4}$**	**3400**	**2°**	**3.2**	**0.2**
SOHM-53C	53	53	16.9	16.9	M5	235	50	25	1400	$9.6×10^{-5}$	3400	2°	3.2	0.2
SOHM-57C	57	56	26.7	26.7	M6	250	72	36	2600	$1.3×10^{-4}$	3200	2°	3.5	0.2
SOH-57C	**57**	**77**	**36.5**	**36.5**	**M6**	**390**	**72**	**36**	**2600**	**$1.8×10^{-4}$**	**3200**	**2**	**3.5**	**0.2**
SOHM-70C	73	77	37	37	M8	450	130	65	4800	$1.5×10^{-4}$	3200	2	3.5	0.2
SOH-70C	**73**	**81.5**	**28**	**28**	**M8**	**670**	**130**	**65**	**2000**	**$5.4×10^{-4}$**	**4500**	**2**	**3.5**	**0.3**

Types in bold are stocked in smallest bore for each size

Bore feasibility

PRODUCT NUMBER	Standard Shaft Diameter(D_1D_2)																							
	ø3	ø4	ø5	ø6	ø6.35	ø8	ø9.525	ø10	ø12	ø14	ø15	ø16	ø18	ø19	ø20	ø22	ø24	ø25	ø25.4	ø28	ø30	ø32	ø35	ø40
SOH-16C																								
SOH-20C																								
SOH-25C																								
SOH-32C																								
SOH-43C																								
SOH-53C																								
SOH-57C																								
SOH-70C																								

Precision Jaw Couplings – SJC Couplings



- Large bore types
- Electrically isolating

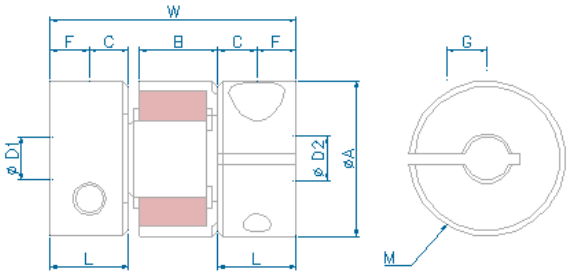

PRODUCT NUMBER	DIMENSION(mm)							Sleeve	Zero Backlash	Max Bore	Weight	Moment of	Max RPM	Rated Torque	Max Torque	Wrench Torque	Torsional Stiffness	Error of Misalignment		
	A	L	W	B	C	F	M	(JIS A)	(N.m)	(mm)	(g)	(kg·m2)	(Min-1)	(N·m)	(N·m)	(N·m)	(N·m/rad)	(°)	(mm)	(mm)
SJC-14C GR	14	7	22	6	1	3.5	M2	92	0.2	5	6	1.6×10-7	11000	1.2	2.4	0.5	14	1.0	0.1	+0.6
SJC-14C RD	14	7	22	6	1	3.5	M2	98	0.2	5	6	1.6×10-7	11000	2	4	0.5	22	1.0	0.1	+0.6
SJC-20C GR	20	10	30	8	1	5	M2.6	92	0.2	8	19	1.1×10-6	7600	3	6	1	29	1.0	0.15	+0.8
SJC-20C RD	20	10	30	8	1	5	M2.6	98	0.2	8	19	1.1×10-6	7600	5	10	1	55	1.0	0.1	+0.8
SJC-25C GR	25	10	32.5	9	1.25	5	M3	92	0.35	12	25	2.4×10-6	6200	5	10	1.8	45	1.0	0.15	+1.0
SJC-25C RD	25	10	32.5	9	1.25	5	M3	98	0.35	12	25	2.4×10-6	6200	9	18	1.8	80	1.0	0.1	+1.0
SJCA-30C GR	30	11.3	35	10	1.5	5.5	M4	98	0.5	14	50	6.2×10-6	5100	7.5	15	2.5	73	1.0	0.15	+1.0
SJCB-30C GR	30	15.8	44	10	1.5	5.5	M4	92	-	14	55	7.5×10-6	5100	7.5	15	2.5	73	1.0	0.15	+1.0
SJCA-30C RD	30	11.3	35	10	1.5	5.5	M4	98	0.5	14	50	6.2×10-6	5100	7.5	15	2.5	73	1.0	0.15	+1.0
SJCB-30C RD	30	15.8	44	10	1.5	5.5	M4	98	-	14	55	7.5×10-6	5100	7.5	15	2.5	73	1.0	0.15	+1.0
SJCA-40C GR	40	19.5	55	12	2	6.7	M5	92	-	18	135	3.1×10-5	3800	10	20	4	570	1.0	0.1	+1.2
SJCB-40C GR	40	25	66	12	2	8.5	M5	98	1.2	18	160	3.9×10-5	3800	10	20	4	570	1.0	0.1	+1.2
SJCA-40C RD	40	19.5	55	12	2	6.7	M5	98	-	18	135	3.1×10-5	3800	10	20	4	570	1.0	0.1	+1.2
SJCB-40C RD	40	25	66	12	2	8.5	M5	98	1.2	18	160	3.9×10-5	3800	10	20	4	570	1.0	0.1	+1.2
SJC-55C GR	55	30	78	14	2	10.5	M6	92	-	25	330	1.6×10-4	2800	35	70	8	1600	1.0	0.15	+1.4
SJC-55C RD	55	30	78	14	2	10.5	M6	98	-	25	330	1.6×10-4	2800	60	120	8	2600	1.0	0.1	+1.4
SJC-65C GR	65	35	90	15	2.5	13	M8	92	-	30	560	3.8×10-4	2350	95	190	16	3000	1.0	0.15	+1.5
SJC-65C RD	65	35	90	15	2.5	13	M8	98	-	30	560	3.8×10-4	2350	160	320	16	4900	1.0	0.1	+1.5
SJC-80C GR	80	45	114	18	3	15	M8	92	-	40	1050	1.0×10-3	1800	190	380	20	6500	1.0	0.1	+1.5
SJC-80C RD	80	45	114	18	3	15	M8	98	-	40	1050	1.0×10-3	1800	320	640	20	11000	1.0	0.1	+1.5
SJC-100C-GR	104	56	140	21	3.5	20	M12	92		60	2550	4.6x10-3	3000	300	600	120	7000	1	0.15	2
SCJ-100C-RD	104	56	140	21	3.5	20	M12	98		60	2550	4.6x10-3	3000	600	1200	120	30000	1	0.1	2

Indent only

Bore feasibility

PRODUCT NUMBER	Stock Bores D1- D2																											
	ø3	ø4	ø4.5	ø5	ø6	ø6.35	ø7	ø8	ø9.525	ø10	ø11	ø12	ø14	ø15	ø16	ø18	ø19	ø20	ø25	ø26	ø28	ø30	ø35	ø40	ø45	ø50	ø60
SJC-14C																												
SJC-20C																												
SJC-25C																												
SJC-30C																												
SJC-40C																												
SJC-55C																												
SJC-65C																												
SJC-80C																												
SJC-100C																												

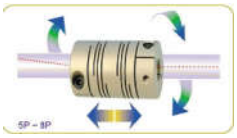

Friction Bushes – CLK Couplings



- Easy assembly and disassembly
- No keyways required
- Simple axial and rotational adjustment
- Ideal for timing pulleys
- Simple machining requirements

Recommended tolerance h8/H8

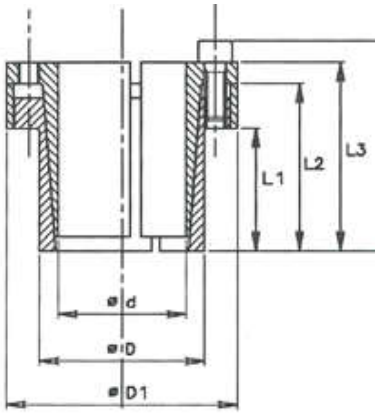

Code	Size dXD	L1	L2	L3	B	D1	Torque Mt	Axial Thrust F ass.	Surface presures on		Tightening screw s	Tightening torque
									Shaft PW	Hub Pn		
	mm	mm	mm	mm	mm	mm	Nm	KN	N/mm2	N/mm2		Nm
CLK110 6-14	6x14	10	18	21	24	25	12	4	185	80	3xM3	2
CLK110 7-15	7x15	12	22	25	29	27	25	7	235	110	3xM4	5
CLK110 8-15	**8x15**	**12**	**22**	**25**	**29**	**27**	**29**	**7**	**205**	**110**	**3xM4**	**5**
CLK110 9-16	9x16	14	23	26	30	28	44	10	205	115	4xM4	5
CLK110 10-16	**10x16**	**14**	**23**	**26**	**30**	**28**	**49**	**10**	**185**	**115**	**4xM4**	**5**
CLK110 11-18	11x18	14	23	26	30	32	53	10	170	105	4xM4	5
CLK110 12-18	**12x18**	**14**	**23**	**26**	**30**	**32**	**58**	**10**	**160**	**105**	**4xM4**	**5**
CLK110 13-23	13x23	14	23	26	30	38	63	10	140	80	4xM4	5
CLK110 14-23	**14x23**	**14**	**23**	**26**	**30**	**38**	**68**	**10**	**130**	**80**	**4xM4**	**5**
CLK110 15-24	15x24	16	29	36	42	45	127	17	185	115	3xM6	17
CLK110 16-24	**16x24**	**16**	**29**	**36**	**42**	**45**	**136**	**17**	**175**	**115**	**3xM6**	**17**
CLK110 17-26	17x26	18	31	38	44	47	180	22	190	125	4xM6	17
CLK110 18-26	18x26	18	31	38	44	47	200	22	180	125	4xM6	17
CLK110 19-27	**19x27**	**18**	**31**	**38**	**44**	**49**	**210**	**22**	**170**	**120**	**4xM6**	**17**
CLK110 20-28	**20x28**	**18**	**31**	**38**	**44**	**50**	**220**	**22**	**160**	**115**	**4xM6**	**17**
CLK110 22-32	22x32	25	38	45	51	54	250	22	115	80	4xM6	17
CLK110 24-34	24x34	25	38	45	51	56	270	22	105	75	4xM6	17
CLK110 25-34	**25x34**	**25**	**38**	**45**	**51**	**56**	**280**	**22**	**100**	**75**	**4xM6**	**17**
CLK110 28-39	28x39	25	38	45	51	61	465	33	135	97	6xM6	17
CLK110 30-41	**30x41**	**25**	**38**	**45**	**51**	**62**	**510**	**33**	**127**	**90**	**6xM6**	**17**
CLK110 32-43	**32x43**	**25**	**38**	**45**	**51**	**65**	**540**	**33**	**120**	**90**	**6xM6**	**17**
CLK110 35-47	**35x47**	**32**	**45**	**52**	**58**	**69**	**790**	**45**	**105**	**80**	**8xM6**	**17**
CLK110 38-50	38x50	32	45	52	58	72	860	45	100	75	8xM6	17
CLK110 40-53	40x53	32	45	52	58	75	900	45	95	70	8xM6	17
CLK110 42-55	42x55	32	45	52	58	78	950	45	90	70	8xM6	17
CLK110 45-59	45x59	45	62	70	78	86	1890	84	110	85	8xM8	41
CLK110 48-62	48x62	45	62	70	78	87	2010	84	105	80	8xM8	41
CLK110 50-65	**50x65**	**45**	**62**	**70**	**78**	**92**	**2100**	**84**	**100**	**75**	**8xM8**	**41**
CLK110 55-71	55x71	55	72	80	88	98	2600	94	85	65	9xM8	41
CLK110 60-77	60x77	55	72	80	88	104	2840	94	75	60	9xM8	41
CLK110 65-84	65x84	55	72	80	88	111	3070	94	70	55	9xM8	41
CLK110 70-90	70x90	65	86	96	106	119	5250	150	90	70	9xM10	83
CLK110 75-95	75x95	65	86	96	106	126	5600	150	80	65	9xM10	83
CLK110 80-100	80x100	65	86	96	106	131	8020	200	100	80	12xM10	83
CLK110 85-106	85x106	65	86	96	106	137	8500	200	95	75	12xM10	83
CLK110 90-112	90x112	65	86	96	106	144	9000	200	90	75	12xM10	83
CLK110 95-120	95x120	65	86	96	106	149	11000	230	100	80	14xM10	83
CLK110 100-125	100x125	65	86	96	106	154	15000	300	120	95	18xM10	83
CLK110 110-140	110x140	90	114	128	140	180	16000	290	80	65	12xM12	145
CLK110 120-155	120x155	90	114	128	140	198	17500	290	70	55	12xM12	145
CLK110 130-165	130x165	90	114	128	140	208	25000	384	90	70	16xM12	145

Normal stock items in bold type

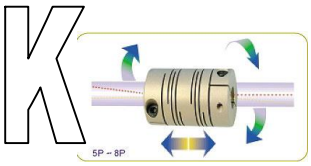

Other types available



DISK COUPLING

DISK COUPLING of SI is built-in coupling which provides big torsion rigidity and superior mobility, and it is high precision coupling that has nearly permanent lifespan.



FLEXIBLE COUPLING

Absorb large amplitude, eccentricity and end play simultaneously
Absorb shock and vibration perfectly
No lubrication and low inertia moment



HIGH TORQUE FLEXIBLE DISK COUPLING

New Ideal and Best Suited Design
Ideal-Realization of Servo System
SHD SeriesHigh Torque Flexible Disk CouplingNew developed flexible disk



CLOSS JOINT COUPLING

The precision calibration coupling of the cross joint type, which can easily absorb eccentricity and amplitude instrumentally,is a coupling

- Some types available in stainless steel
- Non precision types also available



Spur Gear and Racking – Stock Industrial Range



Standard metric spur gears and rack available from stock in non-hardened form. Rack and pinion is a traditional drive system that provides a compact and rugged linear or geared drive. Standard racks are 2m long and can be butt joined for an unlimited length. A great benefit of rack and pinion is its high rigidity even in very long length applications. It is also easy to install and can operate at high speed.

Rack and pinions in plastic, stainless, hardened circular cross section, and high torque helical are available on indent to suit almost any application.

Racks

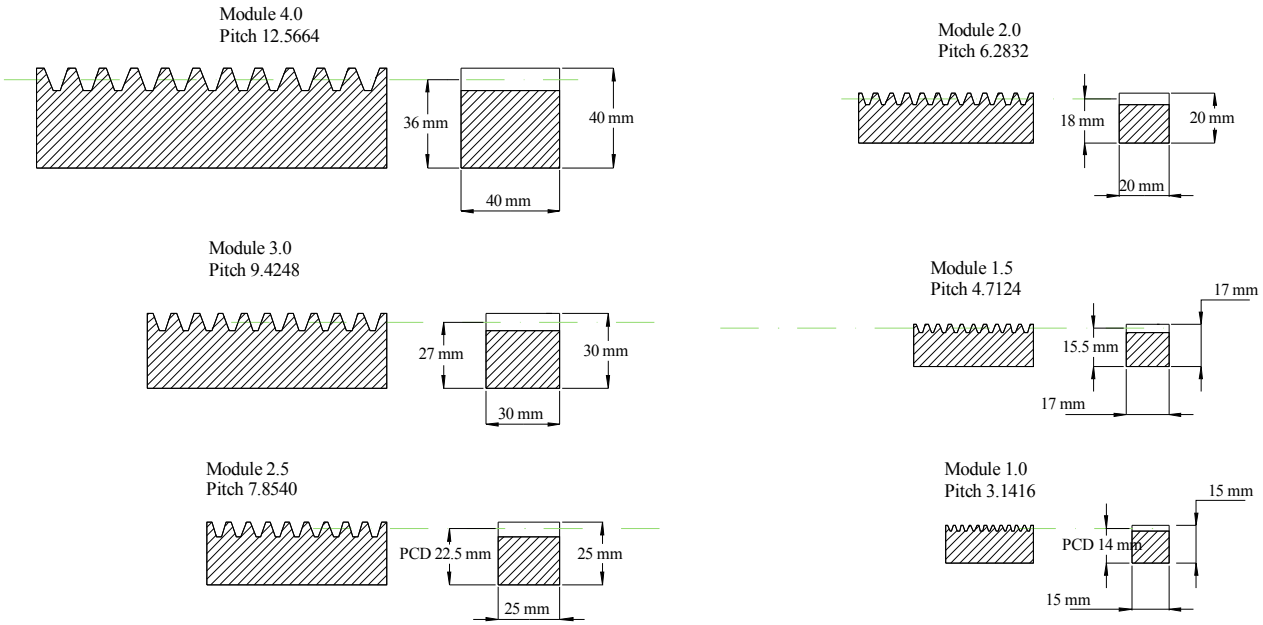

Module	Cross section	# Teeth	Actual Length mm	Precision JIS9e27
1	15x15	636	1998.05	0.056/300mm
1.5	17x17	424	1998.05	0.059/300mm
2	20x20	318	1998.05	0.059/300mm
2.5	25x25	255	2002.77	0.063/300mm
3	30x30	212	1998.05	0.065/300mm
4	40x40	159	1998.05	0.068/300mm

Material S45C (SAE 1045) can be welded and hardened.

Racks can be cut to your required length and lengths are specially machined to be butt jointed. Special designs with pre drilled or counter bored holes can also be supplied on request.



Spur Gears



- Material C45 – heat or nitride treatable.
- Torque values can be factor up to 2.5 times with hardening.

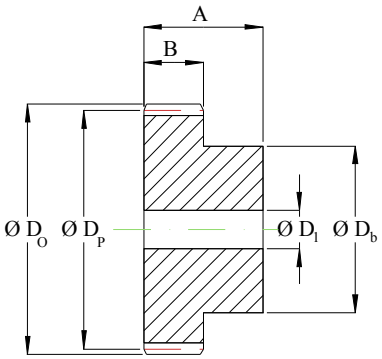

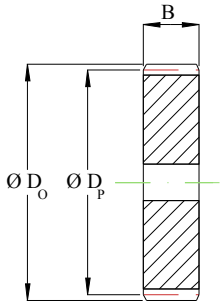

Mod 1 - 2.5

Items in **bold** are regular stock items

	Mod 1					Mod. 1.5					Mod 2					Mod.2.5				
	B=15		A=25			B=17		A=30			B=20		A=35			B=25		A=45		
	Outside Ø	Pitch Ø	Hub Ø	Bore Ø	Torque	Outside Ø	Pitch Ø	Hub Ø	Bore Ø	Torque	Outside Ø	Pitch Ø	Hub Ø	Bore Ø	Torque	Outside Ø	Pitch Ø	Hub Ø	Bore Ø	Torque
z	Do	Dp	Db	D1	Nm	Do	Dp	Db	D1	Nm	Do	Dp	Db	D1	Nm	Do	Dp	Db	D1	Nm
12	14	12	9	-	0.2	21	18	14	8	0.8	28	24	18	10	1.7	35	30	22	10	2.4
13	15	13	10	-	0.3	22.5	19.5	15	8	0.9	30	26	20	10	1.9	37.5	32.5	25	10	3.4
14	16	14	11	-	0.3	24	21	17	8	1.1	32	28	22	10	2.2	40	35	28	10	4.2
15	**17**	**15**	**12**	**-**	**0.4**	**25.5**	**22.5**	**18**	**8**	**1.2**	□□	**30**	**24**	**10**	**2.6**	**42.5**	**37.5**	**30**	**10**	**5**
16	18	16	13	-	0.5	27	24	19	8	1.4	36	32	25	10	3	45	40	32	12	5.8
17	19	17	14	-	0.6	28.5	25.5	20	8	1.7	38	34	25	10	3.5	47.5	42.5	35	12	6.7
18	20	18	15	8	0.7	30	27	20	8	1.9	40	36	25	10	4	50	45	35	12	7.7
19	21	19	15	8	0.8	31.5	28.5	20	8	2.1	42	38	25	10	4.4	52.5	47.5	35	12	8.6
20	**22**	**20**	**16**	**8**	**0.9**	**33**	**30**	**25**	**8**	**2.3**	**44**	**40**	**30**	**10**	**4.9**	**55**	**50**	**40**	**12**	**9.5**
21	23	21	16	8	1	34.5	31.5	25	10	2.5	46	42	30	12	5.5	57.5	52.5	40	14	10.4
22	24	22	16	8	1.1	36	33	25	10	2.8	48	44	30	12	6	60	55	45	14	11.4
23	25	23	18	8	1.2	37.5	34.5	25	10	3	50	46	30	12	6.6	62.5	57.5	45	14	12.4
24	26	24	20	10	1.3	39	36	25	10	3.4	52	48	35	12	7.2	65	60	45	14	13.5
25	**27**	**25**	**20**	**10**	**1.4**	**40.5**	**37.5**	**25**	**10**	**3.6**	**54**	**50**	**35**	**12**	**7.8**	**67.5**	**62.5**	**50**	**14**	**14.6**
26	28	26	20	10	1.5	42	39	30	12	3.9	56	52	40	12	8.1	70	65	50	14	15.8
27	29	27	20	10	1.6	43.5	40.5	30	12	4.1	58	54	40	12	8.7	72.5	67.5	50	14	17
28	30	28	20	10	1.7	45	42	30	12	4.4	60	56	40	12	9.3	75	70	50	14	18.1
29	31	29	20	10	1.8	46.5	43.5	30	12	4.8	62	58	40	14	10	77.5	72.5	50	14	19.4
30	**32**	**30**	**20**	**10**	**1.9**	**48**	**45**	**30**	**12**	**5**	**64**	**60**	**40**	**14**	**10.6**	**80**	**75**	**55**	**14**	**20.7**
31	33	31	25	10	2	49.5	46.5	35	12	5.4	66	62	45	14	11.3	82.5	77.5	55	16	22
32	34	32	25	10	2.1	51	48	35	12	5.7	68	64	45	14	12	85	80	55	16	23.4
33	35	33	25	10	2.3	52.5	49.5	35	12	6	70	66	45	14	12.7	87.5	82.5	55	16	24.8
34	36	34	25	10	2.4	54	51	35	12	6.2	72	68	45	14	13.4	90	85	55	16	26.3
35	**37**	**35**	**25**	**10**	**2.6**	**55.5**	**52.5**	**35**	**12**	**6.6**	**74**	**70**	**45**	**14**	**14.1**	**92.5**	**87.5**	**60**	**16**	**27.8**
36	38	36	25	10	2.7	57	54	35	12	6.9	76	72	45	14	14.9	95	90	60	16	29.3
37	39	37	25	10	2.8	58.5	55.5	40	12	7.3	78	74	50	14	15.6	97.5	92.5	60	16	31
38	40	38	25	10	3	60	57	40	12	7.6	80	76	50	14	16.5	100	95	60	16	32.5
39	41	39	25	10	3.1	61.5	58.5	40	12	8	82	78	50	14	17.3	102.5	97.5	60	16	34.1
40	**42**	**40**	**25**	**10**	**3.3**	**63**	**60**	**40**	**12**	**8.4**	**84**	**80**	**50**	**14**	**18.1**	**105**	**100**	**70**	**16**	**35.9**
41	43	41	30	10	2.4	64.5	61.5	40	12	8.8	86	82	55	16	19	107.5	102.5	70	16	37.9
42	44	42	30	10	3.6	66	63	50	12	9.2	88	84	55	16	19.8	110	105	70	16	39.4
43	45	43	30	10	3.8	67.5	64.5	50	12	9.6	90	86	55	16	20.7	112.5	107.5	70	16	41.7
44	46	44	30	10	3.9	69	66	50	12	10	92	88	60	16	21.6	115	110	70	16	43.7



	Mod 1					Mod. 1.5					Mod 2					Mod.2.5				
	B=15		A=25			B=17		A=30			B=20		A=35			B=25		A=45		
	Outside Ø	Pitch Ø	Hub Ø	Bore Ø	Torque	Outside Ø	Pitch Ø	Hub Ø	Bore Ø	Torque	Outside Ø	Pitch Ø	Hub Ø	Bore Ø	Torque	Outside Ø	Pitch Ø	Hub Ø	Bore Ø	Torque
z	Do	Dp	Db	D1	Nm	Do	Dp	Db	D1	Nm	Do	Dp	Db	D1	Nm	Do	Dp	Db	D1	Nm
45	47	45	30	12	4.1	70.5	67.5	50	12	10.5	94	90	60	16	22.6	117.5	112.5	70	16	45
46	48	46	30	12	4.3	72	69	50	14	10.9	96	92	60	16	23.5	120	115	70	16	47.8
47	49	47	30	12	4.5	73.5	70.5	50	14	11.4	98	94	70	16	24.5	122.5	117.5	80	20	49.9
48	50	48	30	12	4.6	75	72	50	14	11.8	100	96	70	16	25.5	125	120	80	20	50.8
49	51	49	30	12	4.8	76.5	73.5	50	14	12.3	102	98	70	16	26.6	127.5	122.5	80	20	54.3
50	52	50	30	12	5	78	75	50	14	12.8	104	100	70	16	27.6	130	125	80	20	55
51	53	51	40	12	5.1	79.5	76.5	60	14	13.4	106	102	70	16	29.0	132.5	127.5	80	20	58.8
52	54	52	40	12	5.2	81	78	60	14	13.9	108	104	70	16	30.1	135	130	90	20	61.2
53	55	53	40	12	5.4	82.5	79.5	60	14	14.4	110	106	70	16	31.2	137.5	132.5	90	20	63.5
54	56	54	40	12	5.6	84	81	60	14	14.8	112	108	70	16	31.9	140	135	90	20	63.5
55	57	55	40	12	5.8	85.5	82.5	60	14	15.5	114	110	70	16	33.5	142.5	137.5	90	20	68.5
56	58	56	40	12	6	87	84	60	16	15.8	116	112	70	16	34.2	145	140	100	20	68
57	59	57	40	12	6.1	88.5	85.5	60	16	16.4	118	114	70	16	35.4	147.5	142.5	100	20	73.6
58	60	58	40	12	6.3	90	87	60	16	17.1	120	116	70	16	37.1	150	145	100	20	76.2
59	61	59	40	12	6.5	91.5	88.5	60	16	17.7	122	118	70	16	38.3	152.5	147.5	100	20	78.9
60	62	60	40	12	6.7	93	90	60	16	18	124	120	70	16	39	155	150	100	20	77

Mod 3 – 6

Items in **bold** are regular stock items

	Mod 3					Mod 4					Mod 5					Mod 6				
	B=30		A=50			B=40		A=60			B=50		A=75			B=60		A=80		
	Outside Ø	Pitch Ø	Hub Ø	Bore Ø	Torque	Outside Ø	Pitch Ø	Hub Ø	Bore Ø	Torque	Outside Ø	Pitch Ø	Hub Ø	Bore Ø	Torque	Outside Ø	Pitch Ø	Hub Ø	Bore Ø	Torque
z	Do	Dp	Db	D1	Nm	Do	Dp	Db	D1	Nm	Do	Dp	Db	D1	Nm	Do	Dp	Db	D1	Nm
12	42	36	27	12	5.4	56	48	35	14	12.3	70	60	45	20	24.3	84	72	54	20	52.3
13	45	39	30	12	6.3	60	52	40	14	15.2	75	65	50	20	30.7	90	78	60	20	50.3
14	48	42	33	12	7.6	64	56	45	14	18.2	80	70	55	20	36.7					
15	**51**	**45**	**35**	**12**	**9.1**	**68**	**60**	**45**	**14**	**21.2**	85	75	60	20	42.4	102	90	70	20	62.8
16	54	48	38	14	10.6	72	64	50	16	24.2	90	80	65	20	48.1	108	96	75	20	71.7
17	57	51	42	14	12.3	76	68	50	16	27.4	95	85	70	20	53.1					
18	60	54	45	14	13.9	80	72	50	16	30.7	100	90	70	20	61.8	120	108	80	20	90.7
19	63	57	45	14	15	84	76	60	16	34.2	105	95	70	20	68.7					
20	**66**	**60**	**45**	**14**	**16.5**	**88**	**80**	**70**	**16**	**37.8**	110	100	80	20	75.8	132	120	90	20	111.2
21	69	63	50	16	18.2	92	84	70	16	41.6	115	105	80	20	83.2					
22	72	66	50	16	20	96	88	70	16	45.5	120	110	80	20	90.9					
23	75	69	50	16	21.7	100	92	75	20	49.5	125	115	90	20	98.8					
24	78	72	50	16	23.6	104	96	75	20	53.7	130	120	90	20	107	156	144	110	25	156.8
25	**81**	**75**	**60**	**16**	**25.5**	**108**	**100**	**75**	**20**	**58.1**	135	125	90	20	115.6	162	150	110	25	169.2
26	84	78	60	16	28.5	112	104	75	20	62.5	140	130	100	20	124.2					
27	87	81	60	16	30.7	116	108	75	20	67.3	145	135	100	20	133.2					
28	90	84	60	16	33	120	112	75	20	72.1	150	140	100	25	142.5	180	168	-	25	209
29	93	87	60	16	35.3	124	116	75	20	77	155	145	110	25	152.1					
30	**96**	**90**	**60**	**16**	**37.6**	**128**	**120**	**75**	**20**	**82.1**	160	150	110	25	162	192	180	-	25	247.4
31	99	93	60	16	40.1	132	124	80	20	88.3										
32	102	96	70	16	42.6	136	128	80	20	93.1	170	160	-	25	186.6	204	192	-	25	285.0
33	105	99	70	16	45.2	140	132	80	20	100.0										
34	108	102	70	16	47.8	144	136	80	20	106.1										
35	111	105	70	16	50.6	148	140	80	20	111.7	185	175	-	25	222.4	222	210	-	25	
36	114	108	70	20	53.4	152	144	80	25	118.2										
37	117	111	70	20	56.3															
38	120	114	80	20	59.3	160	152	-	25	132.2	200	190	-	25	260.9	240	228	-	25	396.8
39	123	117	80	20	62.3															



	Mod 3					Mod 4					Mod 5					Mod 6				
	B=30		A=50			B=40		A=60			B=50		A=75			B=60		A=80		
	Outside Ø	Pitch Ø	Hub Ø	Bore Ø	Torque	Outside Ø	Pitch Ø	Hub Ø	Bore Ø	Torque	Outside Ø	Pitch Ø	Hub Ø	Bore Ø	Torque	Outside Ø	Pitch Ø	Hub Ø	Bore Ø	Torque
z	Do	Dp	Db	D1	Nm	Do	Dp	Db	D1	Nm	Do	Dp	Db	D1	Nm	Do	Dp	Db	D1	Nm
40	**126**	**120**	**80**	**20**	**65.4**	168	160	-	25	146.2	210	200	-	25	300.2	252	240	-	25	446.7
41	129	123	80	20	68.5															
42	132	126	80	20	71.7															
43	135	129	80	20	75.4															
44	138	132	90	20	78.9															
45	141	135	90	20	81.9	188	180	-	25	185.2	235	225	-	25	381					
46	144	138	90	20	86.2															
47	147	141	100	20	90.0															
48	150	144	100	20	93	200	192	-	25	210.7	250	240	-	25	434					
50	156	150	-	20	100.4	208	200	-	25	228.8	260	250	-	30	456.8					
52	162	156	-	20	110.2	216	208	-	25	246.4	270	260	-	20	503.5					
55	171	165	-	20	123.2	228	220	-	25	275.4	285	275	-	30	563.5					
57	177	171	-	20	132.4	236	228	-	25	295.6	295	285	-	30	605.4					
60	186	180	-	20	143	248	240	-	25	327.2	310	300	-	30	678.4					

Sizing a rack and pinion drive

Sizing a rack and pinion drive is based on the maximum torque the pinion can provide. This can be calculated as follows.

$$T_p = \frac{F_U \cdot d}{2000} \cdot K_A \cdot S_B \quad \text{Pinion torque}$$

For vertical applications: $F_U = m \cdot g + m \cdot a$

For horizontal applications: $F_U = m \cdot g \cdot \mu + m \cdot a$

Acceleration: $a = \frac{v}{t}$

Where:

T_p	=	Torque on the pinion	N.m
d	=	Pinion diameter	mm
F_u	=	Drive force	N
g	=	Gravitational acceleration (9.81)	m/s^2
a	=	Acceleration	m/s^2
m	=	Mass	kg
v	=	Velocity	m/s
K_A	=	Load factor	
S_B	=	Safety factor	

Load factor, K_A

Drive (Machine movement)	Type of machine load		
	Uniform	Medium Shocks	Heavy Shocks
Uniform	1.00	1.25	1.75
Light Shocks	1.25	1.50	2.00
Medium Shocks	1.50	1.75	2.25

Safety factor, S_B should be from engineering judgement but typically 1.1 for light duty non critical to 3 for mission critical high-risk applications.

Timing Belt drives

Timing belt drives are ideal for many applications providing quiet running, maintenance free linear motion that is able to run in many challenging industrial environments. Various pitch profiles and pulley sizes are available to suit a wide varietey of applications. Ranges are available from stock to suit drive mechanisms from plotters, miniature spray heads to heavy materials transfer applications. Belt drives are ideal for fast repetitive motions.

Megadyne group are one of the largest manufacturers of industrial belts. Their main belt drives fit into the following manufacturing types.

V belt	A full range of conventional V-belt drives
Megadyne rubber 	Endless rubber belts available in a wide range of tooth profiles • Fibreglass reinforcement • Chloroprene rubber for wear resistance • Nylon fabric teeth • High torque RPP silver and gold types • Can be supplied as opened ended linear belt • Ultra-high torque Platinum with similar performance to "Carbon" belts
Megapower 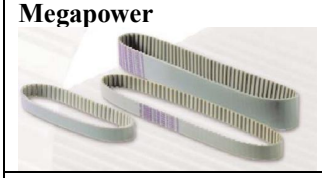	Endless polyurethane moulded belts • Imperial and trapezoidal (T or AT) profiles • Good environmental resistance • Excellent dimensional stability • Wide range of cord possibilities
Megaflex 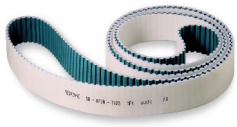	Endless long length polyurethane moulded belts • Lengths from 1.5 to 22.7mtr • Thermoplastic polyurethane • Truly endless Spirally wound steel cord • Wide range of teeth and backing coatings possible
Megalinear 	Open long length linear belting – **our specialty** • Polyurethane outer for good environment resistance and dimensional stability • Continuous steel cords for high traction loads and rigidity with low settling times • Long lengths • Wide range of cord possibilities • Wide range of teeth and backing coatings possible • Can be joined to with any number of teeth using thermosetting process

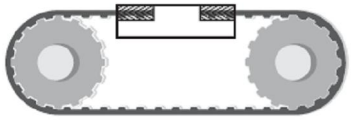

Standard Linear

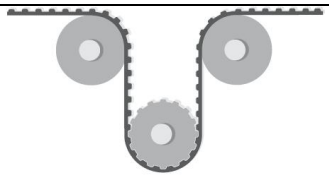

Omega drive

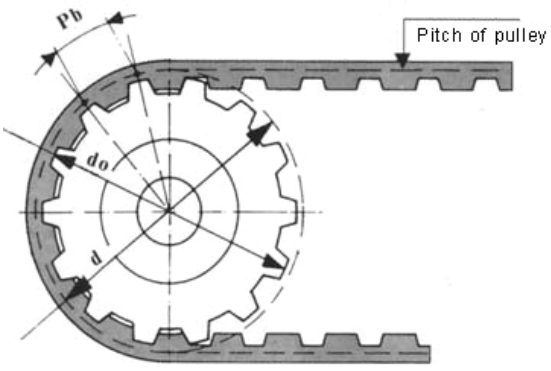

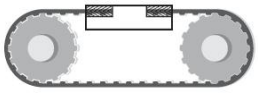

MEGADYNE

T5 open ended belting

A popular type for smaller applications, stocked in 10mm, 16mm and 25mm widths. Lower rating and accuracy than parabolic RPP pitch.

STANDARD WIDTHS (mm)	6	**10**	**16**	**25**	32	50	75	100
Weight (gr/m)	15	**20**	**35**	**55**	70	105	160	220

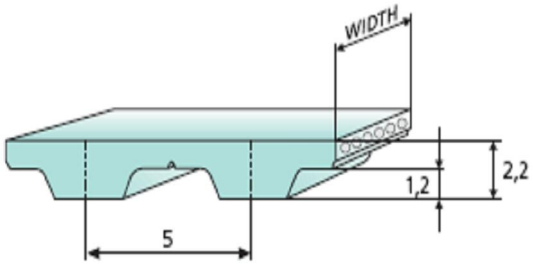

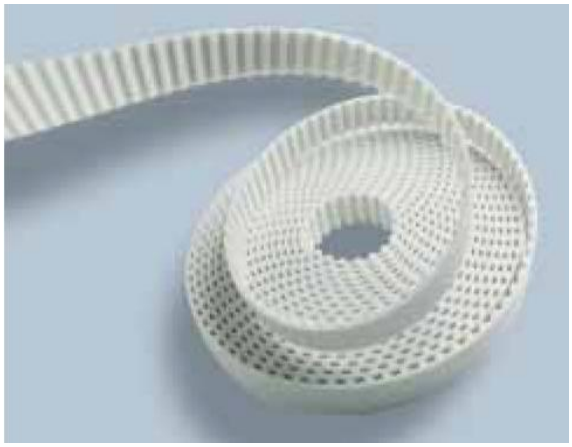

Standard compound: Polyurethane thermoplastic 92 ShA
Cord: Steel
Minimum bend diameter: 15mm (10teeth) (for reverse idler 30mm)

Tooth Resistance

RPM (1/min)	0	20	40	60	80	100	200	300	400	500	750	1000	1500	2000	3000	4000	5000	8000
$F_{p\ spec}$ (N/cm)	24	**23**	**23**	**22**	**22**	**22**	**20**	**19**	**19**	**18**	**17**	**16**	**15**	**14**	**12**	**11**	**11**	**9**

Traction Resistance

Belt width (mm)	6	**10**	**16**	**25**	32	50	75	100
Max Traction Load (N)	175	**355**	**475**	**800**	1005	1660	2280	3060
Breaking Strength (N)	710	**1425**	**1900**	**3205**	4035	6650	8665	11635
Elongation at MTL (mm/m)	4	**4**	**4**	**4**	4	4	4	4

Kevlar, High Power, High Flexibility and Stainless steel cords are also available. Special colours, Nylon fabric, FDA compliant, antistatic, cleats and ribs are also possible.

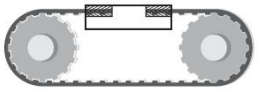

T5 Pulley profile

Standard widths

Type	Belt width		Min.width of pulley		
	Code	Belt width	Double flanged pulley	Single flanged pulley	No Flanged pulley
T5	6	6	8	9	11
	10	10	12	13	15
	16	16	18	20	22
	25	25	27	29	31

Standard Pulleys

Type	Tooth No.	Pitch diameter	Outside diameter	Flanged OD	Flanged ID	Thickness of Flange	Lead
10-T5	10	15.92	15.07	18	12	1	50.01
11-T5	11	17.51	16.66	22	11	1	55.01
12-T5	12	19.1	18.25	25	15	1	60.00
13-T5	13	20.69	19.84	25	15	1	65.00
14-T5	14	22.28	21.43	25	15	1	69.99
15-T5	15	23.87	23.02	26	17	1	74.99
16-T5	16	25.46	24.61	29	18	1	79.98
17-T5	17	27.06	26.21	29	18	1	85.01
18-T5	18	28.65	27.8	32	21	1	90.01
19-T5	19	30.24	29.39	34.5	24.5	1	95.00
20-T5	20	31.83	30.98	34.5	24.5	1	100.00
21-T5	21	33.42	32.57	37.8	28	1	104.99
22-T5	22	35.01	34.16	40	27	1	109.99
23-T5	23	36.61	35.76	40	27	1	115.01
24-T5	24	38.2	37.35	44	32	1	120.01
25-T5	25	39.79	38.94	44	32	1	125.00
26-T5	26	41.38	40.53	44	32	1	130.00
27-T5	27	42.97	42.12	48	38	1	134.99
28-T5	28	44.56	43.71	48	38	1	139.99
29-T5	29	46.15	45.3	51	36	1	144.98
30-T5	30	47.75	46.9	51	36	1	150.01
32-T5	32	50.93	50.08	54	39	1.5	160.00
34-T5	34	54.11	53.26	28	47	1.5	169.99
36-T5	36	57.3	56.45	61	45	1.5	180.01
38-T5	38	60.48	59.63	64	48	1.5	190.00
40-T5	40	63.66	62.81	68	52	1.5	199.99
42-T5	42	66.85	66	73	61	1.5	210.02
44-T5	44	70.03	69.18	73	61	1.5	220.01
46-T5	46	73.21	72.36	78	66	1.5	230.00
48-T5	48	76.39	75.54	82	64	1.5	239.99
50-T5	50	79.58	78.73	86	70	1.5	250.01
60-T5	60	95.49	94.64	102	90	1.5	299.99

T10 open ended belting

Stocked in 16mm, 25mm, 32mm and 50mm widths. . Lower rating and accuracy than parabolic RPP pitch.

STANDARD WIDTHS (mm)	12	**16**	**25**	**32**	**50**	75	100	150
Weight (gr/m)	50	**75**	**115**	**145**	**225**	340	435	680

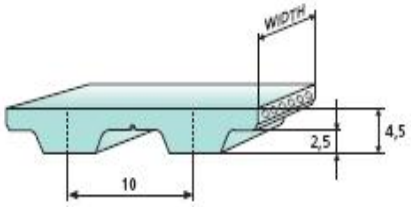

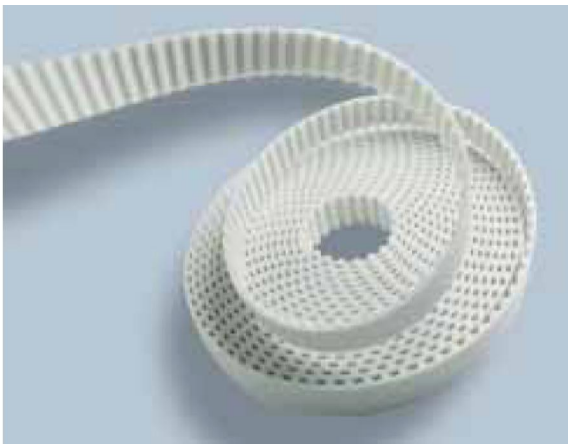

Standard compound: Polyurethane thermoplastic 92 ShA
Cord: Steel
Minimum bend diameter: 36mm (12teeth) (for reverse idler 60mm)

Tooth Resistance

RPM (1/min)	0	20	40	60	80	100	200	300	400	500	750	1000	1500	2000	3000	4000	5000	8000
$F_{p\ spec}$ (N/cm)	**51**	**49**	**48**	**47**	**46**	**45**	**41**	**39**	**37**	**36**	**33**	**31**	**28**	**25**	**22**	**20**	**18**	**14**

Traction Resistance

Belt width (mm)	12	**16**	**25**	**32**	**50**	75	100	150
Max Traction Load (N)	995	**1395**	**2290**	**2890**	**4785**	7665	10290	11855
Breaking Strength (N)	3990	**5585**	**9175**	**11570**	**19150**	29125	39100	41495
Elongation at MTL (mm/m)	4	**4**	**4**	**4**	**4**	4	4	4

Kevlar, High Power, High Flexibility and Stainless steel cords are also available. Special colours, Nylon fabric, FDA compliant, antistatic, cleats and ribs are also possible.

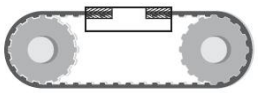

T10 Pulley profile

Standard widths

Type	Belt width		Min.width of pulley		
	Code	Belt width	Double flanged pulley	Single flanged pulley	No Flanged pulley
T10	16	16	18	22	24
	25	25	27	30	33
	32	32	34	37	40

Standard Teeth

Type	Tooth No.	Pitch diameter	Outside diameter	Flanged OD	Flanged ID	Thickness of Flange	Lead
12-T10	12	38.2	36.35	40	27	1	120.01
13-T10	13	41.38	39.53	49	29	1	130.00
14-T10	14	44.56	42.71	49	29	1	139.99
15-T10	15	47.75	45.9	51	36	1	150.01
16-T10	16	50.93	49.08	54	39	1	160.00
17-T10	17	54.11	52.26	61	45	1.5	169.99
18-T10	18	57.3	55.45	61	45	1.5	180.01
19-T10	19	60.48	58.63	64	48	1.5	190.00
20-T10	20	63.66	61.81	68	52	1.5	199.99
21-T10	21	66.85	65	75	55	1.5	210.02
22-T10	22	70.03	68.18	75	55	1.5	220.01
23-T10	23	73.21	71.36	80	60	1.5	230.00
24-T10	24	76.39	74.54	82	64	1.5	239.99
25-T10	25	79.58	77.73				250.01
26-T10	26	82.76	80.91	90	70	1.5	260.00
27-T10	27	85.94	84.09	90	70	1.5	269.99
28-T10	28	89.13	87.28	98	78	1.5	280.01
29-T10	29	92.31	90.46	98	78	1.5	290.00
30-T10	30	95.49	93.64	102	83	1.5	299.99
32-T10	32	101.86	100.01	106	88	1.5	320.00
34-T10	34	108.23	106.38	115	95	1.5	340.01
36-T10	36	114.59	112.74	123	103	1.5	360.00
38-T10	38	120.96	119.11	131	111	1.5	380.01
40-T10	40	127.32	125.47	131	111	1.5	399.99
42-T10	42	133.67	131.84	138	118	1.5	419.94
44-T10	44	140.06	138.21	146	126	1.5	440.01
46-T10	46	146.42	144.57	153	133	1.5	459.99
48-T10	48	152.79	150.94				480.00
50-T10	50	159.15	157.3				499.98
60-T10	60	190.99	189.14				600.01

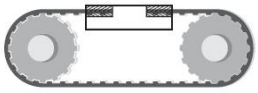

MEGADYNE

MTD3 open ended belting

Ideal for small sized drives, stocked in 10 widths.

STANDARD WIDTHS (mm)	**10**	15	25	50
Weight (gr/m)	**20**	60	100	195

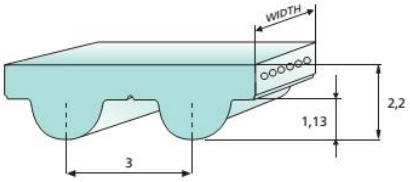

Standard compound : Polyurethane thermoplastic 92 ShA
Standard tooth cover :none
Cord: Steel
Min bend diameter: 19mm (20teeth) (reverse idler 30mm)

Tooth Resistance

RPM (1/min)	0	20	40	60	80	100	200	300	400	500	750	1000	1500	2000	3000	4000	5000	8000
$F_{p\ spec}$ (N/cm)	23	23	22	22	22	22	21	20	20	19	18	17	16	15	13	12	11	9

Traction Resistance

Belt width (mm)	**10**	20	25	50
Max Traction Load (N)	**385**	775	1010	2060
Breaking Strength (N)	**1555**	3115	4050	8255
Elongation at MTL (mm/m)	**4**	4	4	4

Standard Teeth

Type	Tooth No.	Pitch diameter	Outside diameter	Flanged OD	Flanged ID	Thickness of Flange	Lead
15-3M	15	14.32	13.56	18	10	1	44.99
16-3M	16	15.28	14.52	18	10	1	48.00
17-3M	17	16.23	15.47	22	11	1	50.99
18-3M	18	17.19	16.43	22	11	1	54.00
19-3M	19	18.14	17.38	22	11	1	56.99
20-3M	20	19.1	18.34	22	11	1	60.00
21-3M	**21**	**20.05**	**19.29**	**22**	**11**	**1**	**62.99**
22-3M	22	21.01	20.25	25	15	1	66.00
23-3M	23	21.96	21.2	25	15	1	68.99
24-3M	24	22.92	22.16	26	17	1	72.01
25-3M	25	23.87	23.11	26	17	1	74.99
26-3M	26	24.83	24.07	29	18	1	78.01

Larger sizes are possible.

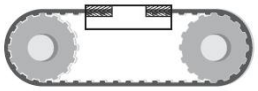

RPP5 open ended belting

Can run on standard HTD5 pulleys in the smaller sizes, Stocked in 10, 25 and 50mm widths. RPP profile has better messing characteristics then T or HTD belts and has larger steel cords. This gives more rigid and accurate positioning with minimal backlash.

STANDARD WIDTHS (mm)	**10**	15	**25**	30	**50**	75
Weight (gr/m)	**40**	60	**100**	120	**195**	295

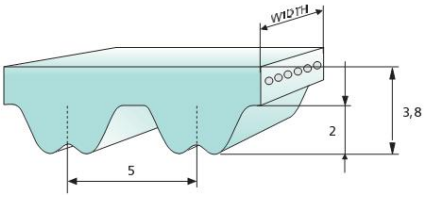

Standard compound : Polyurethane thermoplastic 92 ShA
Standard tooth cover : nylon fabric (NFT)
Cord: Steel
Min bend diameter: 19mm (12teeth) (reverse idler 60mm)

Tooth Resistance

RPM (1/min)	0	20	40	60	80	100	200	300	400	500	750	1000	1500	2000	3000	4000	5000	8000
$F_{p\ spec}$ (N/cm)	37	36	36	36	35	33	35	32	30	30	27	26	24	23	21	19	18	15

Traction Resistance

Belt width (mm)	**10**	15	**25**	30	**50**	75
Max Traction Load (N)	**635**	950	**1715**	2100	**3560**	5690
Breaking Strength (N)	**2545**	3815	**6870**	8400	**14255**	31640
Elongation at MTL (mm/m)	**4**	4	**4**	4	**4**	4

Standard Teeth

Type	Tooth No.	Pitch diameter	Outside diameter	Flanged OD	Flanged ID	Thickness of Flange	Lead
12-5M	**12**	**19.1**	**17.94**	**25**	**15**	**1**	**60.00**
14-5M	14	22.28	21.14	25	15	1	69.99
15-5M	15	23.87	22.73	29	18	1	74.99
16-5M	**16**	**25.46**	**24.32**	**29**	**18**	**1**	**79.98**
17-5M	17	27.06	25.92	32	21	1	85.01
18-5M	18	28.65	27.51	32	21	1	90.01
19-5M	19	30.24	29.1	34.5	24.5	1	95.00
20-5M	**20**	**31.83**	**30.69**	**34.5**	**24.5**	**1**	**100.00**
21-5M	21	33.42	32.28	40	27	1	104.99
22-5M	22	35.01	33.87	40	27	1	109.99
23-5M	23	36.61	35.47	40	27	1	115.01
24-5M	24	38.2	37.06	44	32	1	120.01

Larger sizes are possible.

RPP8 open ended belting – our recommended pitch

Runs on standard HTD8 pulleys, Stocked in 20, 30 and 50mm widths. RPP profile has better messing characteristics then T or HTD belts and has larger steel cords. This gives more rigid and accurate positioning with minimal backlash.

STANDARD WIDTHS (mm)	10	**15**	**20**	**30**	**50**	85	100
Weight (gr/m)	65	100	**130**	**195**	**330**	560	655

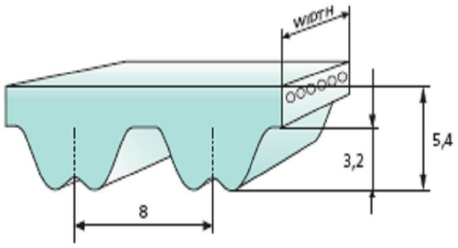



Standard compound: Polyurethane thermoplastic 92 ShA
Standard tooth cover: nylon fabric (NFT)
Cord: Steel
Minimum bend diameter: 45mm (18teeth) (for reverse idler 100mm)

Tooth Resistance

RPM (1/min)	0	20	40	60	80	100	200	300	400	500	750	1000	1500	2000	3000	4000	5000	8000
$F_{p\ spec}$ (N/cm)	76	75	74	73	72	71	65	62	60	57	53	50	45	42	38	35	32	25

Traction Resistance

Belt width (mm)	10	**15**	**20**	**30**	**50**	85	100
Max Traction Load (N)	1350	2030	**2930**	**4510**	**7670**	14010	16625
Breaking Strength (N)	5415	8120	**11730**	**18050**	**30685**	53245	63175
Elongation at MTL (mm/m)	4	4	**4**	**4**	**4**	4	4

Kevlar and High Power cords are also available. Special colours, antistatic, cleats and ribs are also possible.

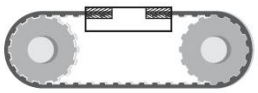

8M Pulley profile

Standard widths

Type	Belt width		Min.width of pulley		
	Code	Belt width	Double flanged pulley	Single flanged pulley	No Flanged pulley
8M	20	20	34	36	38
	30	30	44	46	48
	50	50	54	56	58
	85	85	90	92	94

Standard Teeth

Type	Tooth No.	Pitch diameter	Outside diameter	Flanged OD	Flanged ID	Thickness of Flange	Lead
18-8M	18	45.84	44.46	50	32	1.5	144.01
20-8M	**20**	**50.93**	**49.56**	**55**	**36**	**1.5**	**160.00**
22-8M	**22**	**56.02**	**54.65**	**61**	**45**	**1.5**	**175.99**
23-8M	23	58.57	57.2	64	48	1.5	184.00
24-8M	**24**	**61.12**	**59.75**	**68**	**52**	**1.5**	**192.01**
25-8M	25	63.66	62.29	75	55	1.5	199.99
26-8M	**26**	**66.21**	**64.84**	**75**	**55**	**1.5**	**208.00**
27-8M	27	68.75	67.38	75	55	1.5	215.98
28-8M	**28**	**71.3**	**69.93**	**80**	**60**	**1.5**	**224.00**
30-8M	**30**	**76.39**	**75.02**	**82**	**64**	**1.5**	**239.99**
32-8M	**32**	**81.49**	**80.12**	**90**	**70**	**1.5**	**256.01**
34-8M	**34**	**86.58**	**85.21**	**98**	**78**	**1.5**	**272.00**
36-8M	**36**	**91.67**	**90.3**	**98**	**78**	**1.5**	**287.99**
38-8M	**38**	**96.77**	**95.4**	**106**	**88**	**1.5**	**304.01**
40-8M	**40**	**101.86**	**100.49**	**108.5**	**90**	**1.5**	**320.00**
42-8M	42	106.95	105.58	115	95	1.5	335.99
44-8M	**44**	**112.05**	**110.68**	**123**	**103**	**1.5**	**352.02**
46-8M	46	117.14	115.77	123	103	1.5	368.01
48-8M	48	122.23	120.86	131	111	1.5	384.00
50-8M	50	127.32	125.95	138	118	1.5	399.99
64-8M	64	162.97	161.6				511.99
72-8M	72	183.35	181.98				576.01
80-8M	80	203.72	202.35				640.01
90-8M	90	229.18	227.81				719.99
112-8M	112	285.21	283.84				896.01

The bold types are stocked in aluminium in most widths.

RPP14 Open ended Belting

Runs on standard HTD14 pulleys, Stocked in 40mm, 55mm and 85mm widths.

STANDARD WIDTHS (mm)	**40**	**55**	**85**	115	150
Weight (gr/m)	**470**	**650**	**1000**	1355	1840

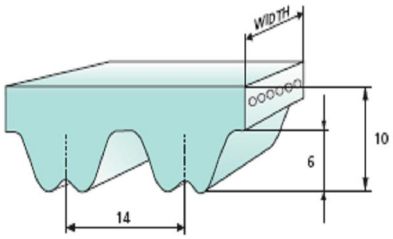



Standard compound: Polyurethane thermoplastic 92 ShA
Standard tooth cover: nylon fabric (NFT)
Cord: Steel
Minimum bend diameter: 140mm (32teeth) (for reverse idler 250mm)

Tooth Resistance

RPM (1/min)	0	20	40	60	80	100	200	300	400	500	750	1000	1500	2000	3000	4000	5000	8000
$F_{p\ spec}$ (N/cm)	**140**	**137**	**135**	**133**	**131**	**128**	**118**	**111**	**105**	**101**	**91**	**84**	**75**	**62**	**52**	**40**	**30**	**–**

Traction Resistance

Belt width (mm)	**40**	**55**	**85**	115	150
Max Traction Load (N)	**12160**	**17600**	**28000**	40820	53850
Breaking Strength (N)	**48640**	**66880**	**106400**	142880	188480
Elongation at MTL (mm/m)	**4**	**4**	**4**	4	4

Special colours, antistatic, cleats and ribs are also possible.

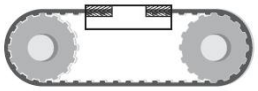

14M Pulley profile

Standard widths

Type	Belt width		Min.width of pulley		
	Code	Belt width	Double flanged pulley	Single flanged pulley	No Flanged pulley
14M	40	40	54	58	62
	55	55	65	68	70
	85	85	95	99	102

Standard Teeth

Type	Tooth No.	Pitch diameter	Outside diameter	Flanged OD	Flanged ID	Thickness of Flange	Lead
28-14M	28	124.78	121.98	134	108	3.5	392.01
29-14M	29	129.23	126.43	138	112	3.5	405.99
30-14M	30	133.69	130.89	143	117	3.5	420.00
32-14M	32	142.6	139.8	152	126	3.5	447.99
34-14M	34	151.52	148.72	161	135	3.5	476.01
36-14M	36	160.43	157.63	170	144	3.5	504.01
38-14M	38	169.34	166.54	179	153	3.5	532.00
40-14M	40	178.25	175.45	187	161	3.5	559.99
42-14M	42	187.17	184.37	196	170	3.5	588.01
44-14M	44	196.08	193.28	205	179	3.5	616.00
46-14M	46	204.99	202.19				644.00
48-14M	48	213.9	211.1				671.99
50-14M	50	222.82	220.02				700.01
56-14M	56	249.55	246.75				783.98
64-14M	64	285.21	282.41				896.01
72-14M	72	320.86	318.06				1008.01
80-14M	80	356.51	353.71				1120.01
90-14M	90	401.07	398.27				1260.00

Clamping plates

Fabricated plates are the preferred method of fastening linear belts. These avoid pressure points in the belts that can lead to pinching of the belt cords and premature failure.

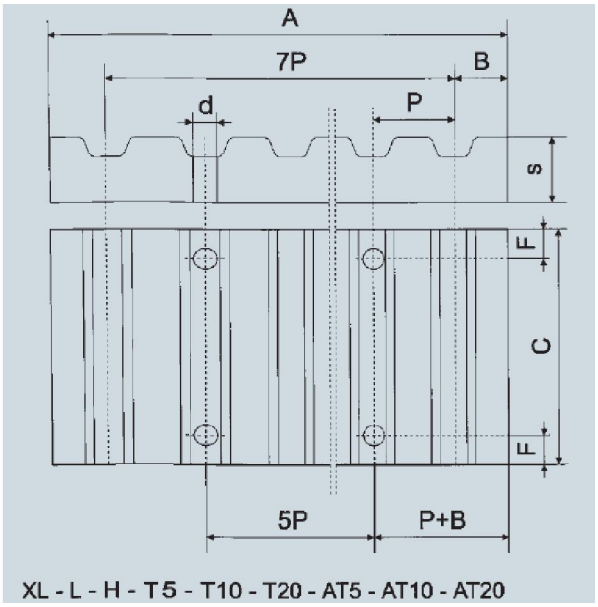

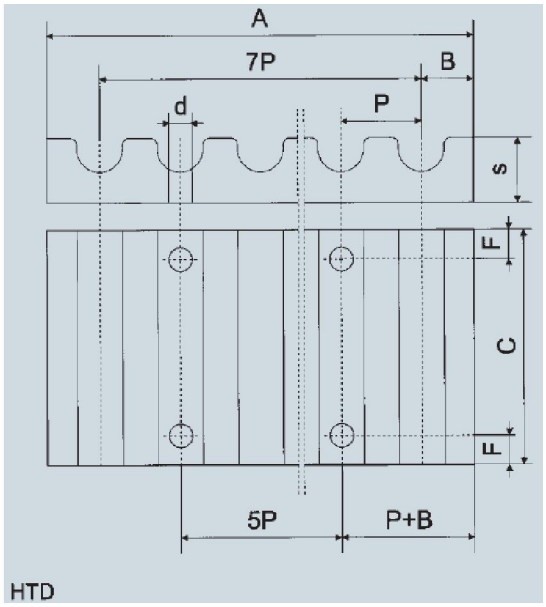

Dimensions for HTD clamping plates

						Belt width (mm)										
						6	9	10	15	20	25	30	40	50	55	85
Pitch	F	d	B	A	S	C										
5M	6	5,5	3,25	41,5	8	25	28		34		44					
8M	8	9	5	66	15			35	40	45		55		75		110
14M	10	11	9	116	22						56		71		86	116

Dimensions for T profile clamping plates

						Belt width (mm)								
						6	10	16	20	25	32	50	75	100
Pitch	F	d	B	A	S	C								
•T5 •AT5	6	5,5	3,25	41,65	8	25	29	35	39	44	51	69		
•T10 •AT10	8	9	5	80	15		35	41		50	57	75	100	125
•T20 •AT20	10	11	10	160	20					56	63	81	106	132



Linear Actuators

A linear actuator is a versatile device that can be thought of as an electrical pneumatic or hydraulic cylinder. These actuators are at their best in intermittent applications such as windows, gates and doors, office automation, home care, traffic facilities, automatic throttles and low duty automation project.

Linear actuators are user friendly, competitively priced and easy to install with a simple 2-wire system. Feedback options allow for more complex control systems or use of control and keypads allow for plug and play installation. Manufacturing is to ISO9000 and many types are CE rated.

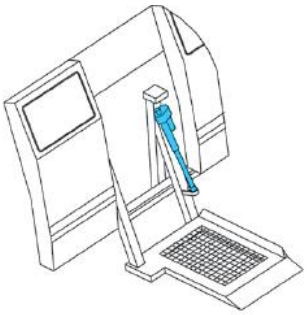

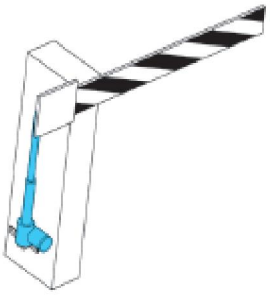

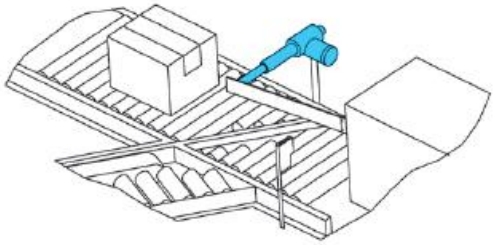

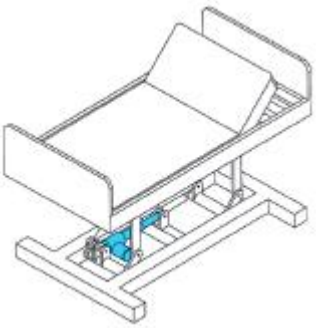

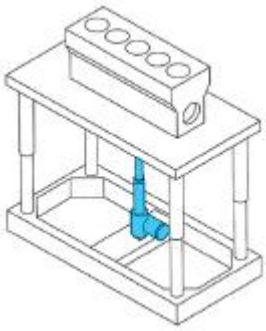

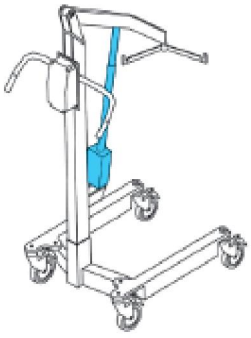

Installations must not place torsion, bending or impact on the actuator. As the actuators use sealed DC motors and plain screw shafts care must be taken to observe the duty cycle or life of the actuator will be compromised.



HIWIN®
Linear Motion Products & Technology

LAM3 industrial actuator



High load 24V actuator for heavy-duty applications.

Easy two wire input cable, Duty cycle based on full load. Actuator comes complete with internal limit switches.

LAK2D controller mounts directly to the actuator.

LAM3-1 types stocked in NZ in IP65, other types available on indent.

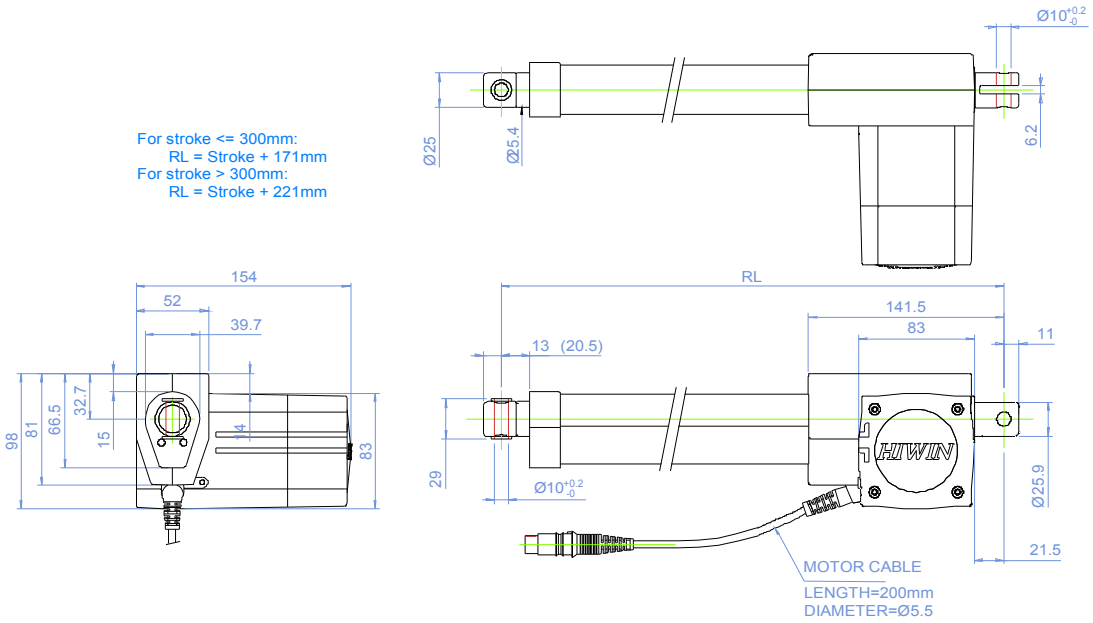

Model	Thrust (N)	Pulling (N)	Holding Force (N)	Speed (mm/s)	Standard Stroke (mm)								Duty Cycle %	Max Current (A)
				Load/no load										24VDC
LAM3-1	**6000**	**5000**	**5000**	**4/5.5**	**50**	**100**	**150**	**200**	**250**	**300**	**350**	**400**	**10**	**6**
LAM3-2	4000	4000	4000	5.5/7.5	50	100	150	200	250	300	350	400	10	5
LAM3-3	3000	3000	3000	7/9	50	100	150	200	250	300	350	400	10	4
LAM3-4	2000	2000	1500	11.5/14.5	50	100	150	200	250	300	350	400	10	4



LAN1 actuator



High load 12V actuator for heavy-duty applications.

Easy two wire input cable, Duty cycle based on full load. Actuator comes complete with internal limit switches.

LAK4 controller can be mounted directly to the actuator.
LAN1-1 types stocked in NZ in IP65, other types on indent

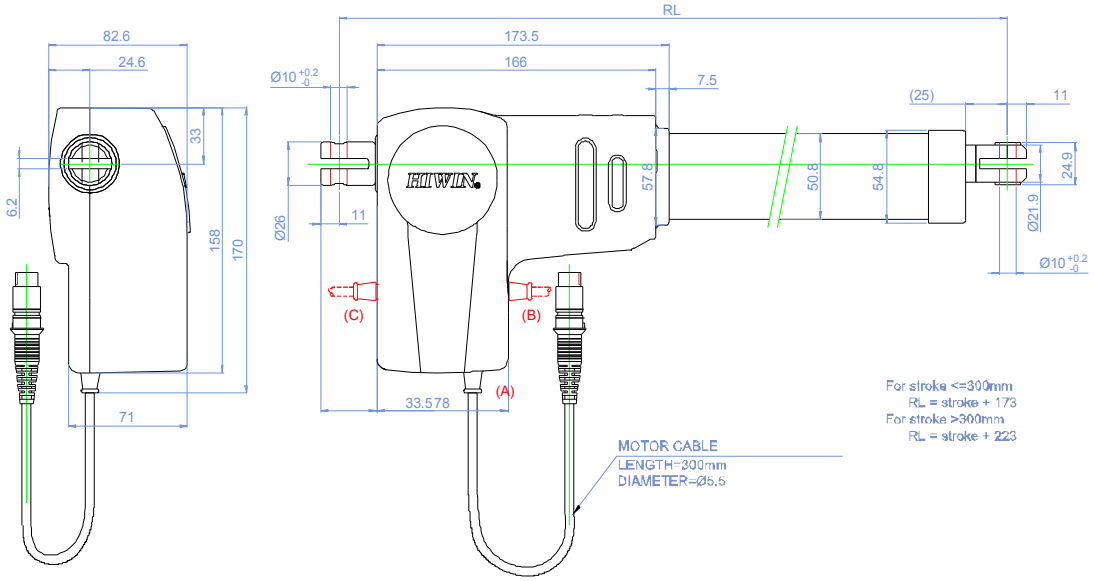

Model	Thrust (N)	Pulling (N)	Holding Force (N)	Speed (mm/s)	Standard stroke (mm)							Duty Cycle %	Max Current (A)
				Load/no load									12VDC
LAN1-1	**5000**	**5000**	**5000**	**3/6**	**100**	**150**	**200**	**250**	**300**	**350**	**400**	**10**	**11**
LAN1-2	4000	4000	4000	4/8	100	150	200	250	300	350	400	10	11
LAN1-3	3000	3000	3000	5/10	100	150	200	250	300	350	400	10	10

Can be supplied as 24V with a wide variety of options including;

- Position feedback
- Safety nuts
- Mechanical spline
- Quick release



HIWIN®
Linear Motion Products & Technology

LAS1/2 compact actuator



Great actuator for a wide variety of applications including shutters, doors, remote controls, hatches, home automation and windows.

12V or 24V with 2 wire connection. Duty cycle based on full load. Actuator comes complete with internal limit switches.

LAS-1 type stocked in NZ with IP65 rating. LAS-2 available on indent.

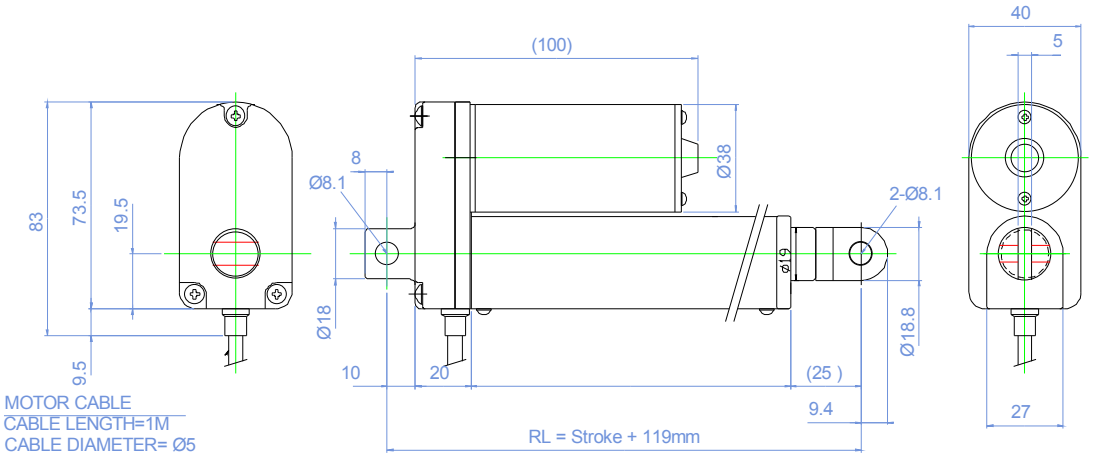

Model	Thrust (N)	Pulling (N)	Holding Force (N)	Speed (mm/s) load/No load	Standard Stroke (mm)						Duty Cycle %	Max Current (A)	
												12V DC	24V DC
LAS-1	**1200**	**1200**	**800**	**8/12**	**25**	**50**	**100**	**150**	**200**	**250**	**10**	**6**	**2.5**
LAS-2	**600**	**600**	**300**	**16/25**	**25**	**50**	**100**	**150**	**200**	**250**	**10**	**6**	**3**

Also available is the similar LAS3 type with potentiometer or optical (pulse) feedback.



LAS4 compact actuator



Elegant design ideal for architectural and exposed applications.

12V or 24V with 2 wire connection. Duty cycle based on full load. Actuator comes complete with internal limit switch.

LAS4-1 type stocked in NZ with IP65 rating. LAS4-2 available on indent.

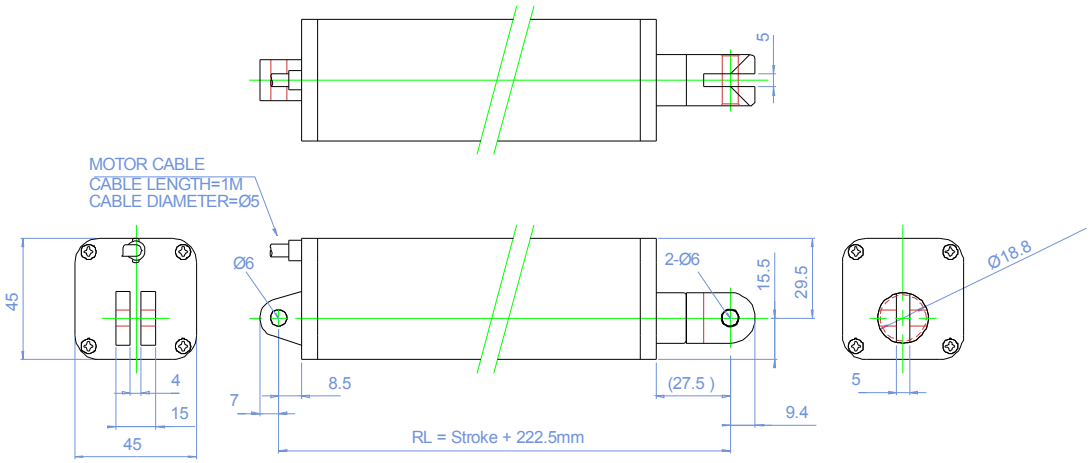

Model	Thrust (N)	Pulling (N)	Holding Force (N)	Speed (mm/s)	Standard Stroke (mm)					Duty Cycle %	Max Current (A)	
				load/No load							12VDC	24VDC
LAS4-1	**800**	**800**	**600**	**10/15**	**100**	**150**	**200**	**250**	**300**	**10**	**5**	**1.8**
LAS4-2	300	300	200	30/46	100	150	200	250	300	10	6	3.6



CI72 controller

Highly capable controller with synchronise function and or overload protection.



- Control 12 or 24V actuators up to 25Amp
- Simple DIP switch setup
- Adjustable 10 step 2-25A current protection
- Single of dual actuator control
- Servo control option – analogue position
- Adjustable soft start
- Synchronous move with POT or hall actuators
- Din rail mount



ID10 Ball screw industrial actuator



Standard **Potentiometer/Limit switches**

Heavy industrial actuator with built in clutch, higher duty cycle. High load ball screw model.

12V or 24V with 2 wire connection. Duty cycle based on full load. Limit switch model can be adjusted.

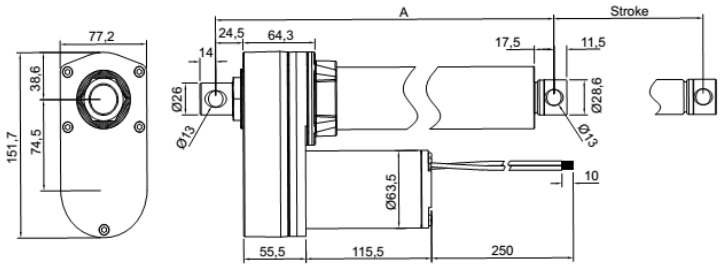

Standard model

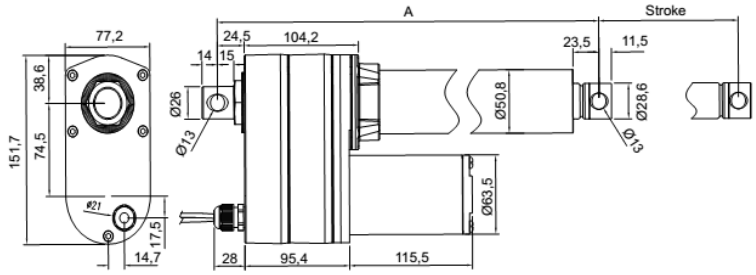

With Limit switches and or POT

Ratio	Thrust (N)	Pulling (N)	Static Load (N)	Speed (mm/s) Load/no load	Standard stroke (mm)							Duty Cycle %	Max Current (A)	
													24VDC	12VDC
5:1	2500	2500	13600	47/67	102	153	203	254	305	457	610	25	14	28
10:1	3500	3500	13600	26/33	102	153	203	254	305	457	610	25	9	18
20:1	4500	4500	13600	14/17	102	153	203	254	305	457	610	25	7	15
30:1	6000	6000	13600	10/11	102	153	203	254	305	457	610	25	7	15
40:1	**7000**	**7000**	**13600**	**7/8**	**102**	**153**	**203**	**254**	**305**	**457**	**610**	**25**	**6**	**12**
		Retracted Length			302	353	404	455	506	735	888			
		POT/LT retracted length			**399**	**450**	**501**	**552**	**680**	**832**	**985**			

Stocked items in bold – *40:1 ratio with limits and POT*

Model coding

ID10 - **24 -** **20 -** **B -** **153 -** **LT.POT.MD...**

Voltage
12-12V DC
24-24V DC

Gear Ratio
5-5:1
10-10:1
20-20:1
30-30:1
40-40:1

A: Acme
B: Ball Screw

Stroke (mm)
102
153
203
254
305
457
610

LT: Limit switch
POT: Potentiometer
MD: Manual Drive
IP65



HIWIN®
Linear Motion Products & Technology

Other types and options



High load LAN3 – 1000N thrust with feedback, spline and safety nut options.



Foot switches and overload protection boxes



Key pads from 1 to 5 axis and foot switch option



Controllers for 1 to 6 axes. Plug and play functionality, battery operated, synchronised and simultaneous movements possible.



Heavy industrial AC actuators with high duty cycle, loads and wide speed range.



Screw jacks in ACME or ball screw, travelling nut or travelling screw layouts



DC Gear Motors

Hiwin DC motors offer a space saving and economical way of adding motor power to your machine or mechanism. All types are rated for continuous duty and direction of rotation can be set by simply changing polarity. Motors are stocked with an integral magnetic hall sensor encoder for interfacing with external control circuitry.

Most types available without gearing and nominal speeds from 3200rpm.



A DC motor output speed will vary with load and applied voltage. Maximum torque (or breaking torque) is the stall torque or start up torque. Nominal torque and speed is at the peak efficiency for the motor.

Voltage rating for the encoder is approx 2.4-26V and the resolution varies with the style and gearing of the unit.



HIWIN®
Linear Motion Products & Technology

AM1 Gearmotor



Continuous duty rating, reversible DC gear motor. Compact size, torque output up to 25Nm peak.

12 or 24 volt options with two gear ratios. Comes complete with encoder.

CE conformity if your machine will be exported.

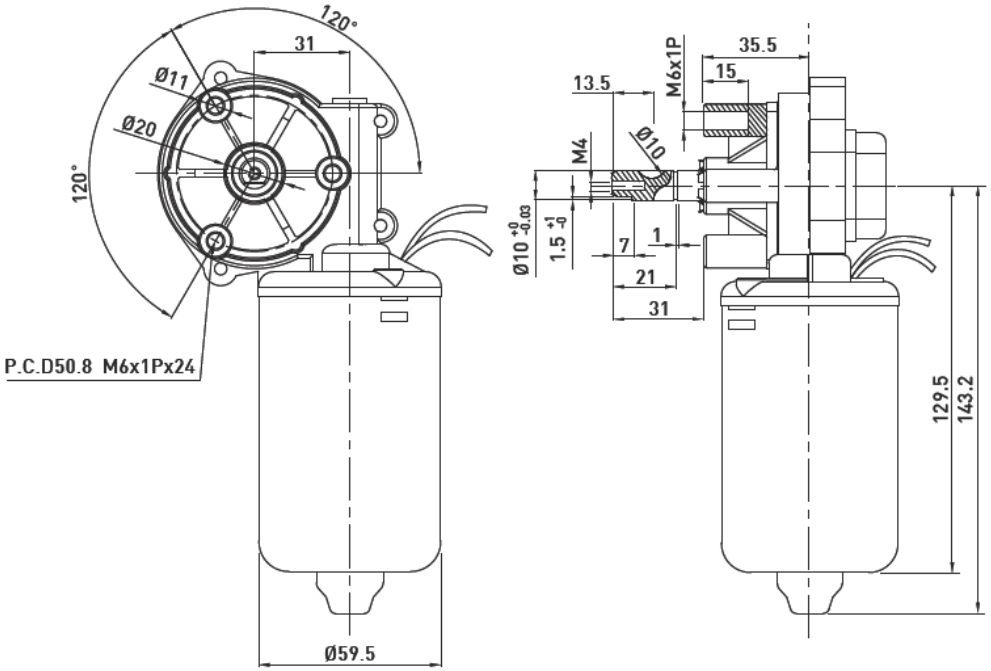

	DC 12V		DC 24V	
	72W	**72W**	**60W**	**60W**
No load current	1.5A (max.)	1.5A (max.)	0.8A (max.)	0.8A (max.)
No load speed	140 rpm	50 rpm	135 rpm	50 rpm
Nominal torque	3.0 N.m	5.0 N.m	3.0 N.m	5.0 N.m
Nominal speed	110 rpm	40 rpm	115 rpm	40 rpm
Nominal current	6.0A (max.)	6.0A (max.)	2.5A (max.)	2.5A (max.)
Maximum current	26A	21A	15A	8A
Breaking torque	14 N.m	25 N.m	20 N.m	25 N.m
Reduction ratio	2 : 52	1 : 52	2 : 52	1 : 52
Resolution	15 pulse/rev	15 pulse/rev	15 pulse/rev	15 pulse/rev
Rated duty	S1	S1	S1	S1
Weight	1200 g	1200 g	1200 g	1200 g
Number	FB0130101201	FB0130101202	FB0130102401	FB0130102402
Note		Self-Locking		Self-Locking



AM3 Gearmotor



Continuous duty rating, reversible DC gear motor. Compact size, torque output up to 55Nm peak.

12 or 24 volt options, comes complete with encoder.

CE conformity if you machine will be exported.

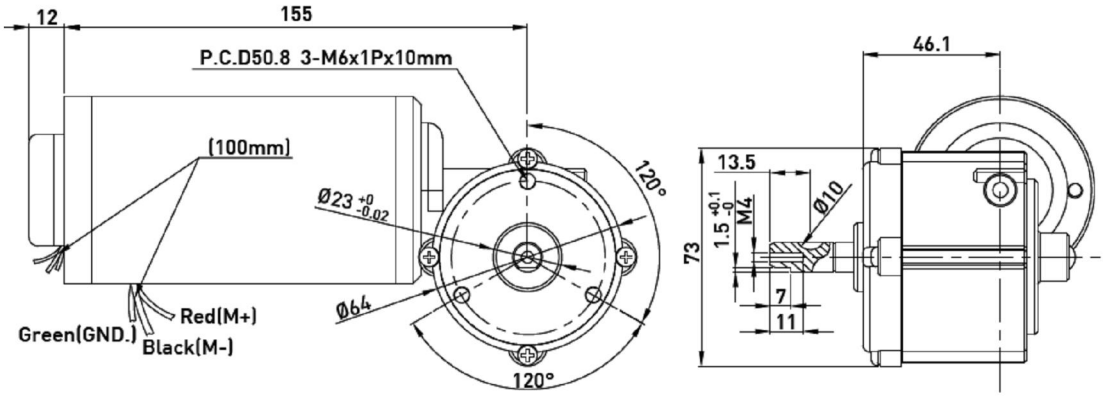

	DC 12V 66W	DC 24V 60W
No load current	2.0A (max.)	1.5A (max.)
No load speed	37 rpm	37 rpm
Nominal torque	5.0 N.m	5.0 N.m
Nominal speed	33 rpm	33 rpm
Nominal current	5.5A (max.)	2.5A (max.)
Maximum current	30A	15A
Breaking torque	55 N.m	55 N.m
Reduction ratio	1 : 65.33	1 : 65.33
Resolution	980 pulse/rev	980 pulse/rev
Rated duty	S1	S1
Weight	1950 g	1950 g
Number	FB0130301201	FB0130302401



HIWIN®
Linear Motion Products & Technology

AM6 Gearmotor



Continuous duty rating, reversible DC gear motor. Compact size, torque output up to 3Nm peak.

12 or 24 volt options, comes complete with encoder.

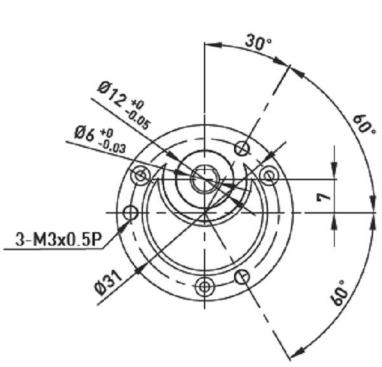

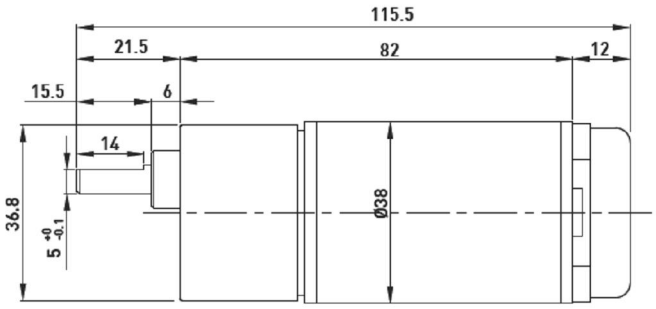

	DC 12V 48W	DC 24V 48W
No load current	1.0A (max.)	0.5A (max.)
No load speed	155 rpm	155 rpm
Nominal torque	0.5 N.m	0.5 N.m
Nominal speed	130 rpm	130 rpm
Nominal current	4.0A (max.)	2.0A (max.)
Maximum current	19A	7A
Breaking torque	3 N.m	3 N.m
Reduction ratio	1 : 50	1 : 50
Resolution	750 pulse/rev	750 pulse/rev
Rated duty	S1	S1
Weight	440 g	440 g
Number	FB0130601202	FB0130602402

Also available in a offset gear style



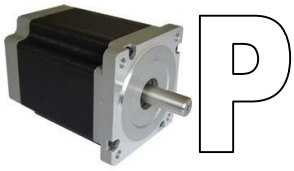

Stepper Motors

A DC stepper motor offers the most economical entry to precision motion. The motors move a certain angle of rotation as the phases are energized in succession and micro stepping can be used in some applications to reduce the step angle. Being brushless they are suitable for continuous motion.

Model	Frame (except shaft)	Step Angle °	Motor Length, L mm	Current/ Phase A	Resistance / Phase Ω	Inductance / Phase mH	Holding Torque N.m	# of Leads	Detent Torque g.cm	Rotor Inertia g.cm²	Mass Kg
JK42HM47-1684	Nema 17	1.8	48	1.68	1.65	2.8	0.44	4	260	68	0.3.5
JK57HS76-4204	Nema 23	1.8	76	4.2	0.6	1.8	1.8	4	600	440	1.1
JK86HS115-6004	Nema 34	1.8	115	6	0.6	6.5	8.7	4	2400	2700	3.8

Detent torque is the torque required to turn the shaft when not electrically connected

Electrical connection

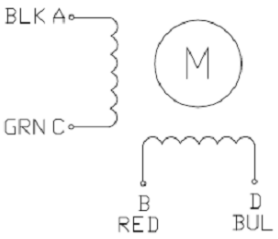

Wire	Colour (typical)	Phase
A	Black	B+
C	Green	B-
B	Red	A+
D	Blue	A-

Swapping phase order connection to the drive will change motor rotation direction. Swapping the cables within a phase will cause motor instability or stalling.

Physical dimensions

Frame size		Shaft Diameter	Shaft Length	Pilot Diameter	Pilot Length	Mounting Bolt Circle	Bolt Hole Size	Bolt Hole spacing	Overall width
Metric	NEMA*	S	SL	PD	PL	PCD	X	BW	W
42	**17**	5	24	22	2	43.8	M3x3.5	31	42
56	**23**	6.35	21	38.1	1.6	66.7	5	47.1	56
86	**34**	12.7	37	73	1.52	98.4	5.5	69.5	86
110	**42**	19	55.37	55.5	1.52	125.7	8.5	89	110

*Shaft sizes listed above are not traditional NEMA sizes.

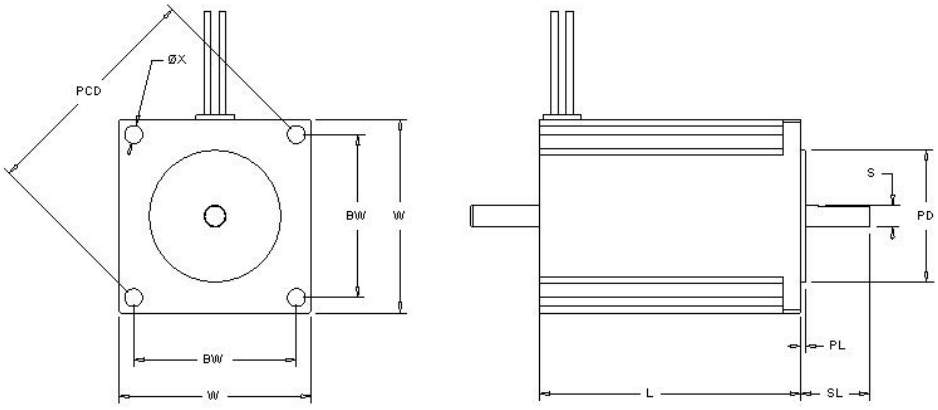



Driver

A stepper driver will be required in all but the lowest powered applications. The driver functions as an amplifier for low power control signals, while also adding some motor and mechanism protection. A pulse train control signal from PLC or other host controller is required to run the motor.

- Overheat protection
- automatic half current when not moving
- connection error protection
- Motor lock and free rotation input
- Micro stepping: 2, 4, 5, 8, 10, 16, 25, 32, 50, 64, 125, 128

JK1545 for NEMA23 frame
Power input: 24V – 50V DC
Output current: 1.3A-4.5A with 8 selectable settings



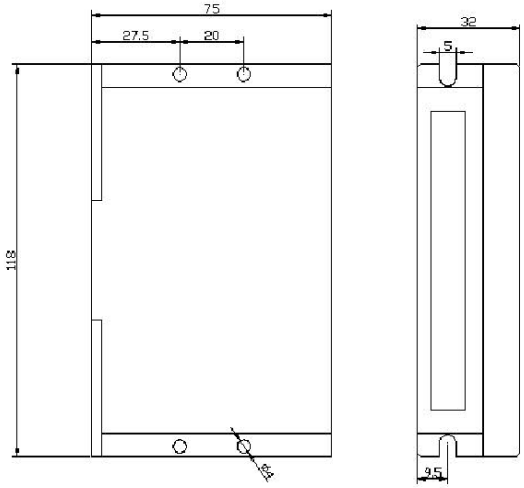

2M2280N for NEMA42 frame
Power input: 240V AC
Output current: 4.5A-8A with 8 selectable settings



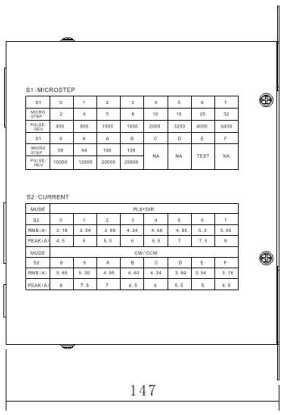

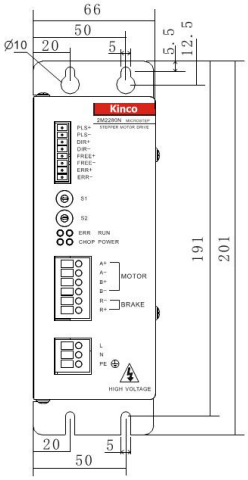

Servo Systems

Since 1915 Yaskawa have been at the forefront of the automation and motion control industry. So influential have the Yaskawa R&D laboratories been that they first coined the very term "Mechatronics". Yaskawa is Japan's largest robot manufacturer and the world's largest manufacturer of AC drives. Some key features of the Yaskawa SigmaV servo include;

- 1million ppr encoder as standard for higher resolution
- Auto-tuning for simplified setups
- FREE SigmaWin+ software setup tool with help database and tuning oscilloscope
- Rugged motor enclosures to IP55 or higher
- Quality ISO9000 manufacture
- Compliance to UL, cUL, CE and TUV standards
- A wide range of motor types to suit any inertia load
- Braked motors available for power out holding
- Electronic torque overload to minimise collision damage



Servo controls

Yaskawa servos can be interfaced to run with a wide range of controllers.

Single axis

A Yaskawa servo drive with Indexing card can be used to create a standalone single box positioning system. The device has simple I/O that can be used to call preprogramed moves or sequence of moves from either push button or called from a host controller.

As an alternative standard servo drives will accept analogue speed, analogue torque, pre-set speed or pulse train signals. PLCs with pulse train output are common and a popular way of controlling smaller systems. We have a range of quality PLCs suitable for a range of applications. These drives can also be used as a high performance upgrade for stepper based systems.

Multi axis

Mechatrolink is a field network developed by Yaskawa specifically for high-speed motion control. Each servo pack connects with USB or Ethernet style connectors in a daisy chain configuration. Controller wiring is eliminated and the motion controller can access servo settings on the fly. Simple controllers are available for 1 to 4 axes. High end controllers can run up to 16 or more servo or inverter axis and they can connect to other field networks to integrate into a factory system. These controllers runs ladder logic programming familiar to industrial electricians and no awkward G-code programming is required. This system is perfect for multi-axis interpolation and synchronisation.

CNC control

Full CNC controllers require the use of G-code programming and are widely used in machining applications. A CNC controller comes in to its own in applications that are subject to change or short run where constant changes to PLC code is impractical. In most cases CAD is used to design a model of the finished part and the G-code is generated with CAM software. We have been involved in a number a CNC project using stepper, servo, PC and controller based systems.



Servo Motors

SGMJV medium inertia series

The SGMJV motors have a wide speed range, high inertia ratio and an amazingly high output from such a small physical size. This makes them ideal for demanding, high-speed applications. Typical applications include electrical printed circuit board machines, food processing and packaging machines, general robotics and material handling machines.

Performance

		A5A	01A	02A	04A	08A
Rated Output	W	50	**100**	200	**400**	**750**
Rated Torque	N.m	0.159	**0.318**	0.637	**1.27**	**2.39**
Peak Torque	N.m	0.557	**1.11**	2.23	**4.46**	**8.36**
Rated Speed	min^{-1}	**3000**				
Max Speed	min^{-1}	**6000**				
Moment of Inertia	$kg.m^2x10^{-4}$	0.0414	**0.0665**	0.259	**0.442**	**1.57**
Max inertia ratio		**20**		**15**	**10**	

Standard types have an IP55 enclosure and 20bit (1million ppr) encoder. Options include shaft seals, a variety of keyways, and electromagnetic brake. 100, 400 and 750W systems are normal stock items.

Dimensions

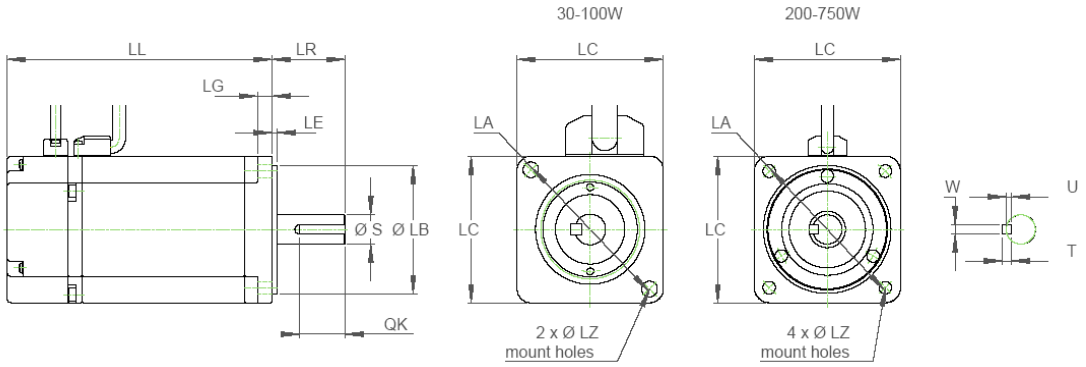

SGMJV	LL	LC	LR Shaft Length	LA PCD	LZ Hole Ø	LG	LB Spigot	LE	S Shaft Ø	QK	W Key	T	U	Mass (kg)
01	94	40	25	46	4.3	5	30 0 -0.021	2.5	8 0 -0.008	14	3	3	1.8	0.4
04A	128.5	60	30	70	5.5	6	50 0 -0.025	3	14 0 -0.011	14	5	5	3	1.3
08A	155	80	40	90	7	8	70 0 -0.03	3	19 0 -0.013	22	6	6	3.5	2.7

SGMGV general purpose series

General-purpose servo motors from 0.3 to 15kW. This series has a standard and high-speed range and are suitable for driving higher inertia loads. Typical applications include transfer machines, food processing and packaging, materials handling and machine tool feeds.

Performance

		05A	09A	13A	20A	30A	44A	55A	75A
Rated Output	kW	0.45	0.85	**1.3**	1.8	2.9	**4.4**	5.5	7.5
Rated Torque	N.m	2.86	5.39	**8.34**	11.5	18.6	**28.4**	35	48
Peak Torque	N.m	8.92	13.8	**23.3**	28.7	45.1	**71.1**	87.6	119
Rated Speed	min^{-1}	1500							
Max Speed	min^{-1}	3000							
Moment of Inertia	$kg.m^2x10^{-4}$	3.33	13.9	**19.9**	26	46	**67.5**	89	125
Max inertia ratio		5							

Standard types have IP67 enclosures and a 20bit (1million ppr) encoder. Options include absolute encoder, shaft seals, electromechanical brakes and a variety of keyways. 1.3kW and 4.4kW are normally available from stock.

Dimensions

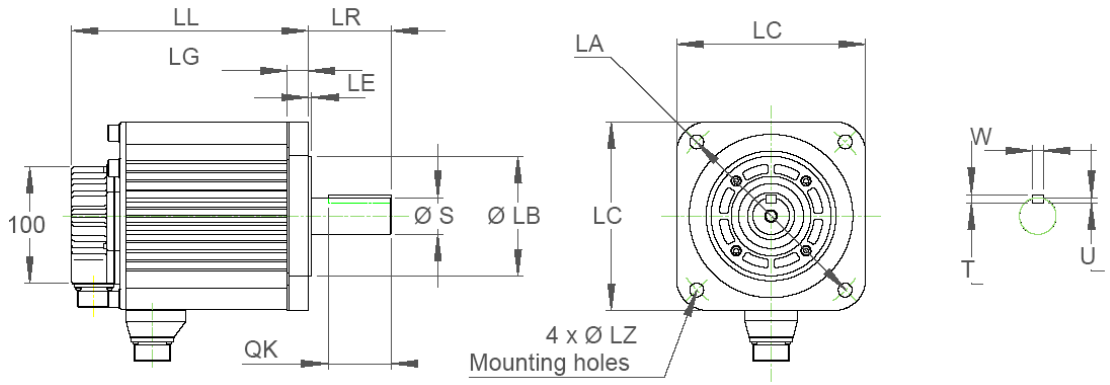

SGMGV	LL	LC	LR Shaft Length	LA PCD	LZ Hole Ø	LG	LB Spigot		LE	S Shaft Ø		QK	W	T	U	Mass (kg)
05A	179	90	40	100	6.6	10	80	0 -0.03	5	16	0 -0.011	20	5	5	3	3.2
09A	195	130	58	145	9	12	110	0 -0.035	6	19	0 -0.013	25				5.5
13A	**211**									22	0 -0.013		6	6	3.5	7.1
20A	229									24	0 -0.013		8	7	4	8.6
30A	239	180	79	200	13.5	18	114.3	0 -0.025	3.2	35	0.01 0	60	10	8	5	13.5
44A	**263**															17.5
55A	334		113							42	0 -0.016	90	12	8	5	21.5
75A	380															29.5

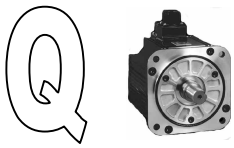

Servo Drivers

Yaskawa servo drivers have a number of unique features that make them ideal for machine builders and production environments.

- Maximum torque limits to minimise machine damage and overloads
- 400V, 230V and 110V options
- Auto tuning
- Win+ software for tuning and setup including performance oscilloscope
- Pulse, Torque and speed control with combined max speed or torque setting
- Control inputs to suit majority of controllers and PLCs.
- Mechatrolink, Ethercat and other field network options available

Basic specification of stock drives

	R90A	2R8A	5R5A	120A	170D
Capacity kW	0.1	0.4	0.75	1.5	5
Voltage	200	200	200	200	400
Phase	1 or 3	1 or 3	1 or 3	1	3
Mass kg	0.9	1	1.5	2.8	5.6
Depth mm	140	170	180	180	230
Width mm	40	40	70	100	135
Height mm	160	160	160	180	250
Extension mm	75				

- Extension is extra space required in front of drive for connectors

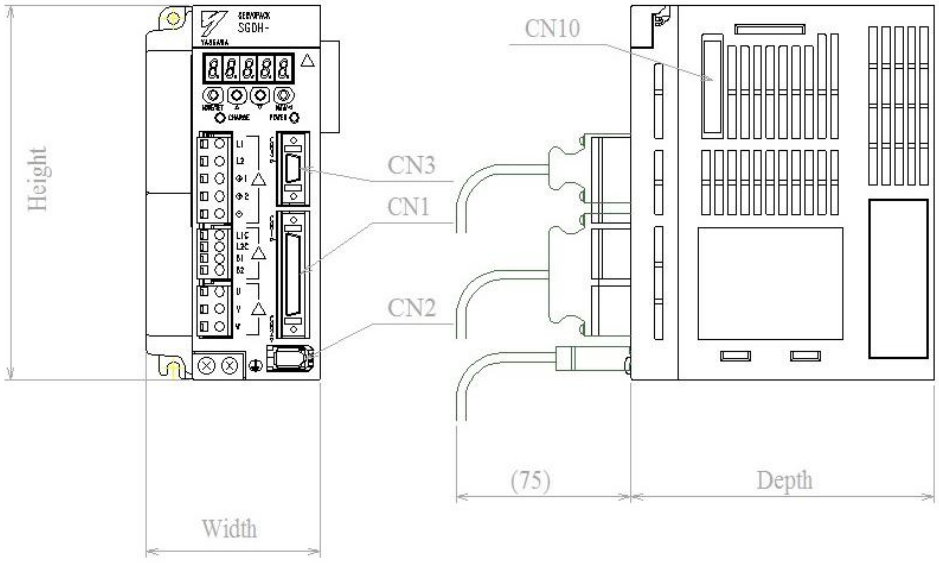

VSD Drives

Speed control drives for standard industrial induction motors are commonly known as frequency drives, inverters or VSDs. Yaskawa make a range of quality drives for standard industrial 3 phase induction motors most of which can also drive permanent magnet motors. Along with speed control VSDs provide motor protection and soft start functionality. The following types are normally in stock.

J1000	V1000	A1000
Entry level V/F control micro drive. Small size, quiet running and high quality,	More advanced micro drive with higher performance V/F or OLV control, built in PLC and PID controller in a very small physical size	Full featured advanced drive in a larger frame size. A wide range of add on functionality including closed loop encoder feedback and field networks
		
CIMR-JT	CIMR-VT	CIMR-AT

Voltage frequency (V/F) control is the simplest control method. It has a lower speed accuracy and start up torque but is easy to implement and allows a wide speed range. This sort drive type is suitable for simple conveying, fans, pumps and spindle applications. Speed accuracy can be increased on higher performance drives by adding encoder feedback.

Open Loop Vector (OLV) control is a more sophisticated control method where the drive uses a mathematical model of the motor in its control scheme. This allows the drive to directly control motor speed and torque for much tighter speed control, high torque at low speed and torque limiting. This control offers better performance for applications such as lifts, crushing and variable load situations.

Closed Loop Vector (CLV) control is vector control with encoder feedback. Full torque is available at zero rpm and is often referred to as servo like performance. Motor torque can also be directly controlled. Well suited to applications like elevators, hoists, capping, winders and positioning.

All drive types can be connected to the free drive software Drivewizard (J1000 requires additional card). This software allows visual monitoring of drive status, motion oscilloscope, parameter backup, transfer between drives and parameter upgrade of old drive types.



YASKAWA
A World of Automation Solutions™

Yaskawa VSDs are rated by their normal rated output current. The table below lists the recommended drive capacity to motor power. Heavy duty rating is for applications with higher overloads tolerance for varying loads. Larger drives can be used to drive smaller motors.

Max Motor Capacity KW	Single Phase 200V[1]		Three Phase 400V[3]	
	Normal Duty	Heavy Duty	Normal Duty	Heavy Duty
0.1		BA0001		
0.2	BA0001	BA0002		4A0001
0.4	BA0002	BA0003	4A0001	4A0002
0.75	BA0003	BA0006	4A0002	4A0004
1.1	BA0006			
1.5		BA00010	4A0004	4A0005
2.2	BA0010	BA0012[2]	4A0005	4A0007
3.0	BA0012[2]		4A0007	4A0009
3.7		BA0018[2]	4A0009	4A0011
5.5			4A0011	4A0018
7.5			4A0018	4A0023
11			4A0023	4A0031
15			4A0031	4A0038
18.5			4A0038	

1 – A1000 only available in 3 phase. 2 – V1000 only. 3 - A1000 drives go up to 630kW

Motors can be run directly from the drive control panel. Typical control wiring with default parameters is as below.

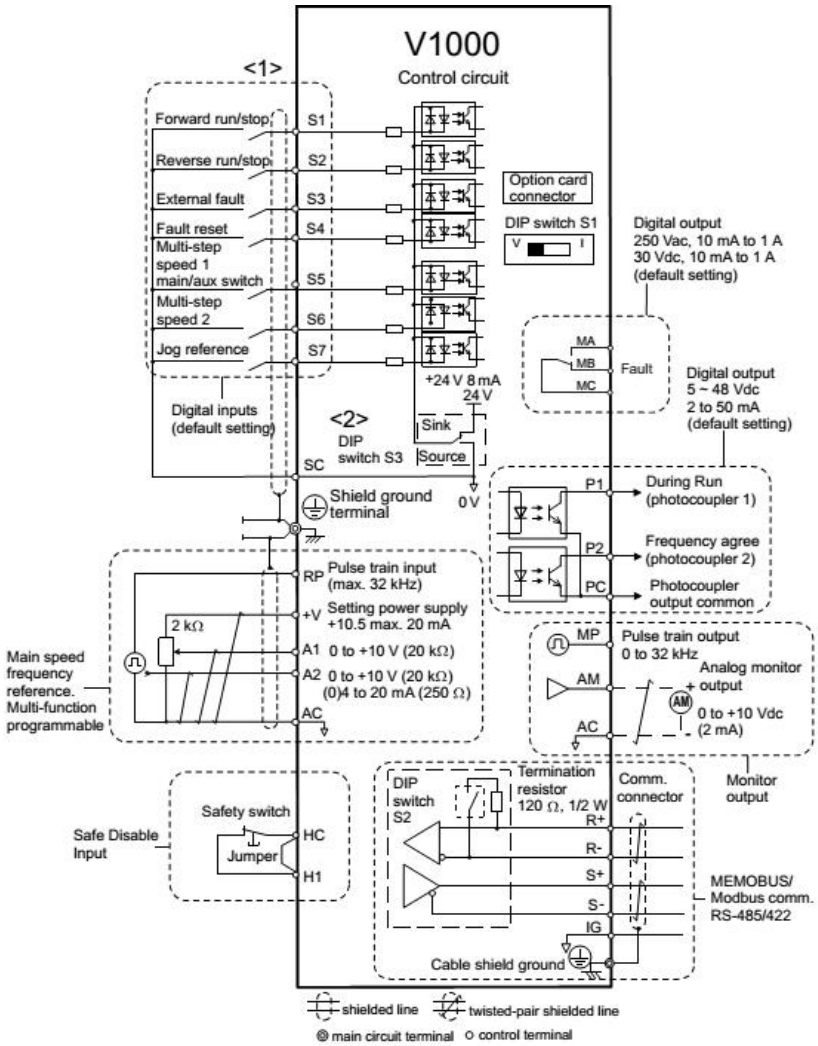

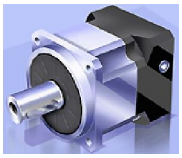

Precision Gear heads

Complete your position system with a precision planetary gearhead from Apex. These are high quality extremely accurate gear heads used to increase a servomotors torque output or inertia capacity. Use of a planetary gear mechanism allows an extremely small physical size. Precision NC machining and robotics used in the manufacturing process allow Apex to produce a highly efficient and quiet gear head. Apex are the largest precision gear head manufacture in the world and gear heads to suit most motors can be delivered in 7 days.

Ratios range from 3 to 100 in 1 or 2 stages with a range of frame sizes with up to 2000Nm nominal output torque. The precision AB series offers backlash down to 1 arc minutes or 0.016 of a degree. Frames are IP65 or IP64 as standard and lubricated for life. All types mount directly onto the servomotor with an interface flange to suit the motor and have a built in clamp coupling for the motor shaft. Apex have a huge range of interface plates available from stock to suit nearly every servo motor.

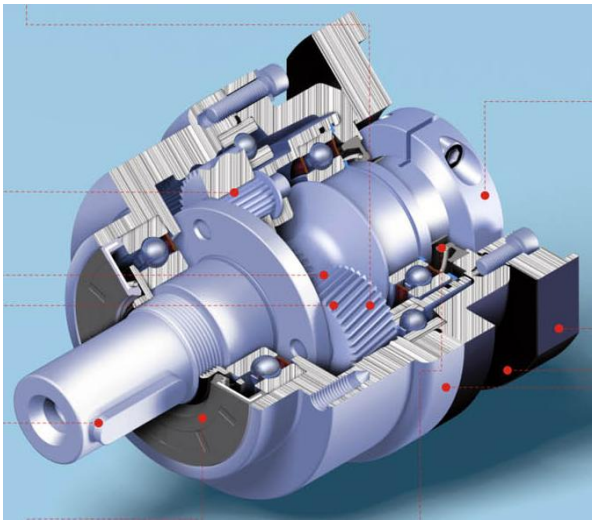

AB Series	Premium Helical	AB	Inline	Ratios: 1-100 Backlash: 1-7arcmin Output: 2-2000Nm Stainless body, Anodised adaptor, IP65, lubricated for life.
		ABR	Right Angle	
AE Series	Economy Helical	AE	Inline	Ratios: 1-100 Backlash: 8-12arcmin Output: 2-2000Nm Stainless body, Anodised adaptor, IP65, lubricated for life.
		AER	Right Angle	
P Series	Low cost spur gear	PE, PG, PN, PB	Inline Various Dimensional standards	Ratios: 1-100 Backlash: 8-10arcmin Output: 9-400Nm Electro Coated, Anodised adaptor, IP64, lubricated for life

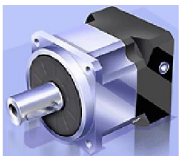

Other versions available

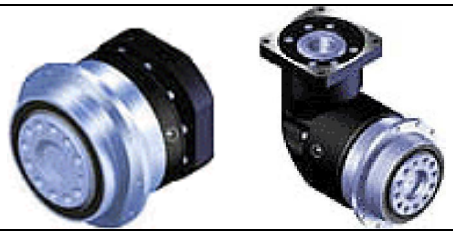	AD and ADR flange drive
	AL and ALR pulley drive
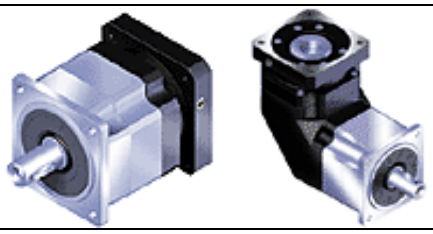	AN and ANR NEMA mount
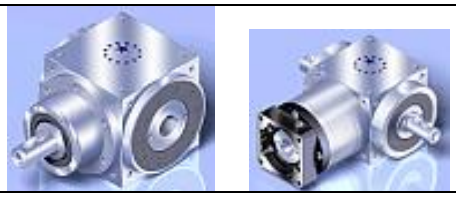	AT series spiral bevel in a wide range of styles

Other manufacturers



Cable Carrier

Cable management is critical for reliability in high cycling machinery. Sagging and unsupported cables wear and fail prematurely. This applies to electrical, optical, pneumatic and hydraulic cables and these need to be contained and guided to prevent premature failure.

Cable carrier (also known as energy chain or cable chain) is a segmented structure that flexes around a fixed radius and remains rigid in all other dimension. The cables are run within the rectangular cross section of the cable carrier and as the cable carrier moves with the cables they are not subject to abrasive wear. Cable carrier is available in a range of bend radius and should be large enough to keep the cables within their flexural limits.

Shinsung of Korea have been producing this product for over 20 years. Their cable carriers are a quality reliable product at a great price point.

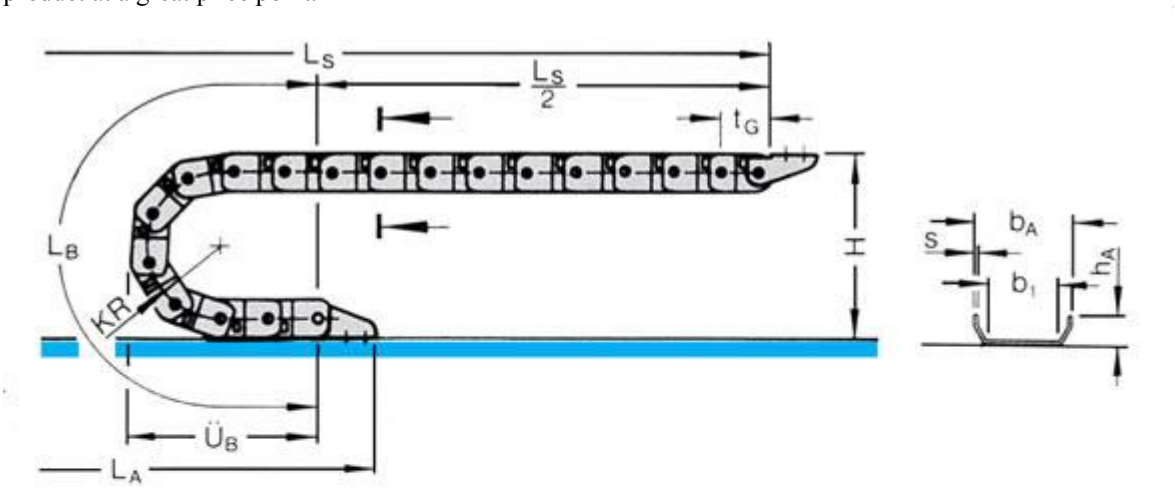

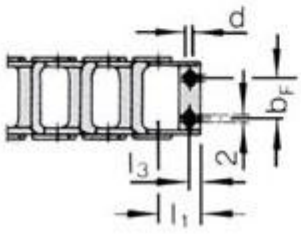

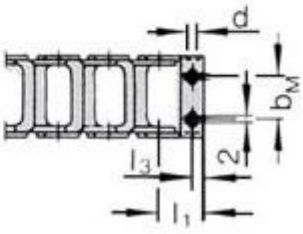

Determination of chain length: $L_K = \frac{L_S}{2} + L_B$ rounded off to nearest chain division tG

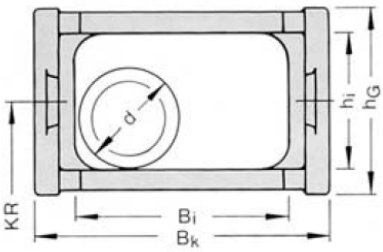

Bk	External Width
hG	External Height
Bi	Internal Width
Hi	Interal Height
KR	Bending Radius
d	Cable/hose diameter
Ls	Stroke Length
tG	Chain pitch
Lb	Arc length



SHINSUNG

SMI miniature cable chain

Material: Glass fibre reinforced
Dividers: Optional
Sag Type: Yes
Temperature range: -30degC - +130degC

Connectors come as a pair, one male, one female and can be rotated through 180deg.



Type	Pitch	Bending Radius (KR)	Internal Width (Bi)	Internal Height (hi)	External Width (Bk)	External Height (hG)	Max Hose Size (d)	Hinged Bars	Links /M	Weight Kg/M
SMI 0130.06	13	20, 28, 37	6	10	12	12.5	5	Yes	77	0.132
SMI 0130.10	13	20, 28, 37	10	10	16	12.5	8	Yes	77	0.14
SMI 0130.15	13	20, 28, 37	15	10	21	12.5	8	Yes	77	0.15
SMI 0130.20	13	20, 28, 37	20	10	26	12.5	8	Yes	77	0.16
SMI 0180.06	18	28, 37, 50	6	15	12	18	5	Yes	55	0.238
SMI 0180.10	18	28, 37, 50	10	15	16	18	8	Yes	55	0.25
SMI 0180.15	18	28, 37, 50	15	15	23	18	13	Yes	55	0.275
SMI 0180.20	**18**	28, **37**, 50	**25**	**15**	**34**	**18**	**13**	**Yes**	**55**	**0.3**
SMI 0180.30	18	28, 37, 50	30	15	38	18	13	Yes	55	0.275
SMI 0180.40	**18**	28, 37, **50**	**40**	**15**	**48**	**18**	**13**	**Yes**	**55**	**0.3**

* stocked items are in bold

Connectors

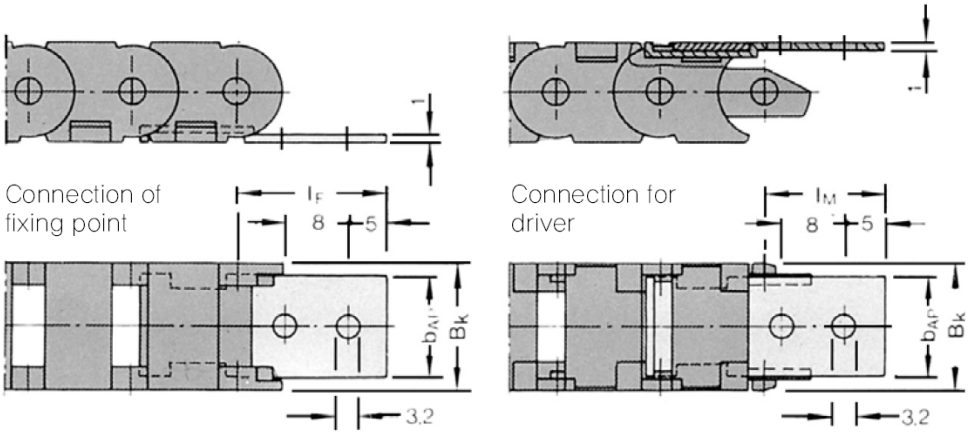

Type	Length female (lf)	Length male (lm)	Width (bap)
SMI 0130	18	15	Bk-3.5
SMI 0180	16	13	Bk-3.5



SMO Mono cable chain

Material: Glass fibre reinforced
Dividers: Optional
Sag Type: Yes
Temperature range: -30degC - +130degC

Connectors come as a pair, one male, one female and can be rotated through 180deg.



Type	Pitch	Bending Radius (KR)	Internal Width (Bi)	Internal Height (hi)	External Width (Bk)	External Height (hG)	Max Hose Size (d)	Hinged Bars	Links /M	Weight Kg/M
SMO 0320.20	32	37, 47, 77	13	19	24	25	11	Closed	31	0.32
SMO 0320.41	32	37, 47, 77	24	18	35	25	16	Cover Strip	31	0.38
SMO 0320.42	**32**	**37**, 47, 77, 100	**24**	**19**	**35**	**27**	**16**	**Closed**	**31**	**0.38**
SMO 0450.20	45	52, 94, 125, 150, 200	38	24	54	34	22	Closed	22	0.65
SMO 0450.21	**45**	**52**, 94, 125, 150, 200	**38**	**24**	**54**	**40**	**22**	**Yes**	**22**	**0.75**
SMO 0450.40	45	52, 94, 125, 150, 200	58	24	74	34	22	Closed	22	0.74
SMO 0450.41	**45**	52, **94**, 125, 150, 200	**58**	**24**	**74**	**40**	**22**	**Yes**	**22**	**0.85**
SMO 0450.60	45	52, 94, 125, 150, 200	78	24	94	34	22	Closed	22	0.93
SMO 0450.61	**45**	**52**, 94, **125,** 150, 200	**78**	**24**	**94**	**40**	**22**	**Yes**	**22**	**1.1**
SMO 0450.85	45	52, 94, 125, 150, 200	103	24	119	34	22	Closed	22	1.2
SMO 0625.22	62.5	90, 125, 200, 300	65	34	93	62	31	Closed	16	1.55
SMO 0625.23	**62.5**	90, **125**, 200, 300	**65**	**34**	**93**	**62**	**31**	**Yes**	**16**	**1.55**
SMO 0625.40	62.5	90, 125, 200, 300	108	34	126	56	31	Closed	16	1.4
SMO 0625.42	62.5	90, 125, 200, 300	108	34	136	62	31	Closed	16	1.71
SMO 0625.43	**62.5**	90, 125, **200,** 300	**108**	**34**	**136**	**62**	**31**	**Yes**	**16**	**1.71**

* stocked items are in bold

Connectors

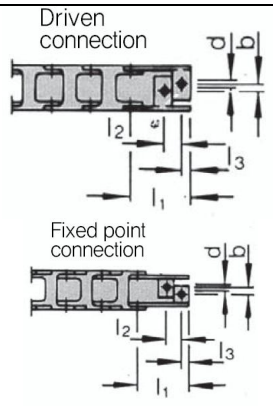

SMO 0320

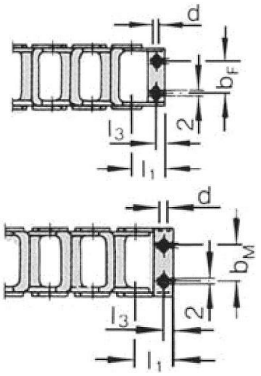

SMO 0450

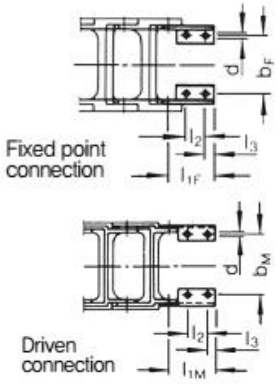

SMO 0650

Type	Length L1	Length L_{1F}	Length L_{1M}	Length L2	Length L3	Width female bf	Width male bm	Hole d
SMO 0320.42	53	0	0	24	8	22	25	Ø7/M6
SMO 0450.21	40	0	0	0	10	22	25	Ø7/M6
SMO 0450.41	40	0	0	0	10	42	45	Ø7/M6
SMO 0450.61	40	0	0	0	10	62	65	Ø7/M6
SMO 0625.23	0	63	70	30	12.5	49	54	Ø9/M8
SMO 0625.43	0	63	70	30	12.5	92	54	Ø9/M8

Other types available

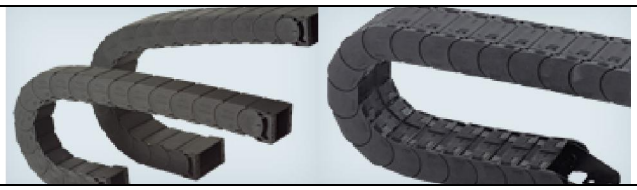	Covered SSK, SKC types
	Band cable chain
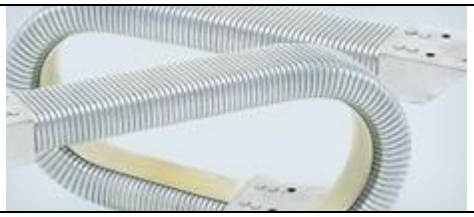	Metal reinforced for Machine tools
	Heavy duty roller wheel crane type
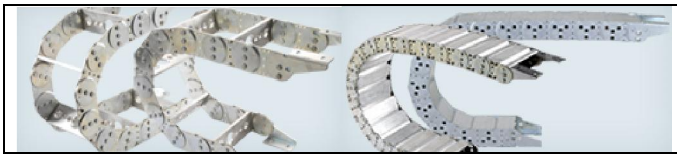	Steel Cable Chain
	3D Robot type



Ball transfer units

Ball transfer units provide low friction motion in two directions but restrict motion in the third. Commonly used in a table arrangement for conveying, freight and package handling but also used for tooling and sheet metal applications.



A ball transfer unit has a large high load central ball supported by a large number of smaller balls. This configuration is encased in a spherical body with the arrangement offering high load capacity and low friction. Use of hardened bearing steels and heat treated bodies ensures a long service life with more economical types using pressed steel bodies. For challenging environments types with seals and drain/debris channels are available. Types are made with carbon or stainless steel bodies, nylon or stainless steel balls and spring loaded.

Light duty push fit

Style is designed to be drop fit into a plate with pre-cut holes. Comes with a fixing clip to retain unit and allow for irregular bore and diameter. Stainless steel and acetal ball types also available.

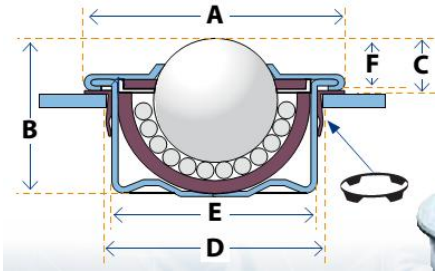



	Max Load kg	Ball Ø	A	B	C	D	E	F
L15C	**50**	**15**	**31**	**21**	**9.8**	**24.8-25**	**24**	**9.5**
L22C	**160**	**22**	**45**	**29.5**	**10.1**	**37-37.3**	**36**	**9.8**
L30C	**250**	**30**	**55**	**37**	**14.1**	**46.3-46.7**	**45**	**13.8**

Regular stock items in bold type

Light duty Saturn type

Style is designed to be drop fit into a plate with pre-cut holes and fastened down. Stainless steel and acetal ball types also available.

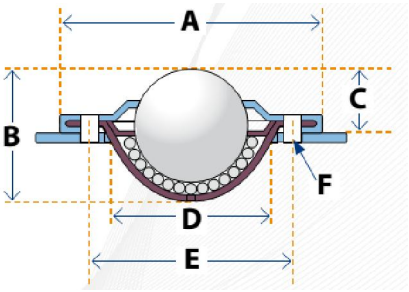



	Max Load kg	Ball Ø	A	B	C	D	E	F
LD15	20	15	35.2	19.1	9.5	23.9		
LD16	**15**	**15**	**41**	**19**	**10.8**	**24**	**30**	**2x3.4**
LD23	**120**	**22**	**45**	**27.7**	**9.8**	**33**	**39**	**3x3.5**
LD26	60	25	56	30	14.6	36	45	2x4.0

Regular stock items in bold type

Light duty flange mount

This type can be bolted straight down onto a table.



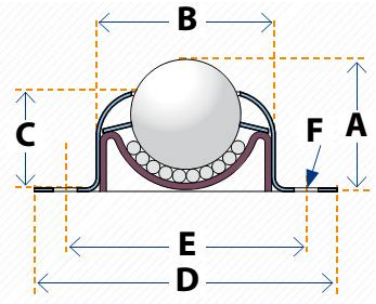



	Max Load kg	Ball Ø	A	B	C	D	E	F
LF25	**55**	**25.4**	**30.2**	**42**	**22.2**	**69.9x50.8**	**55.6**	**2x5.6**
LF38	115	38.1	46	66.7	36.2	76.2x76.2	62.7x62.7	4x7.1

Regular stock items in bold type



Medium duty bolt fitting

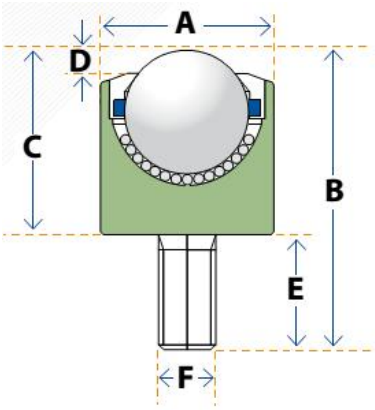



	Max Load kg	Ball Ø	A	B	C	D	E	F
MSP8	12	8	18	27	12	2	15	M6x1
MSP10	20	12	20	29.8	17.8	3	12	M8x1.25
MSP11	**25**	**12**	**20**	**48**	**20**	**3**	**28**	**M6x1**
MSP14	50	15	24	32.5	20.5	3.9	12	M6x1
MSP19	**75**	**19**	**30**	**46.5**	**26**	**4.8**	**20.5**	**M8x1.25**
MSP22	**180**	**22**	**36**	**62.9**	**37.5**	**2.6**	**25.4**	**M12x1.75**
MSP30	350	30	45	69.2	43.8	6.5	25.4	M12x1.75
MSP45	600	45	62	107.3	66	8.5	41.3	M20x2.5

Regular stock items in bold type

MX Extreme type

Machined and case hardened housing with stainless 420 hardened balls for high load and shock resistance. Large drain channels to eject water and or contamination in wet and or dirty environments. Specifically designed for more demanding cargo applications but well suited to a range of demanding situations. Types with fixing clips and all stainless construction are also available.

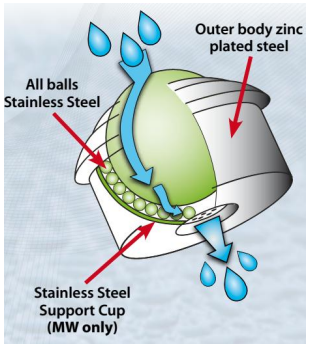

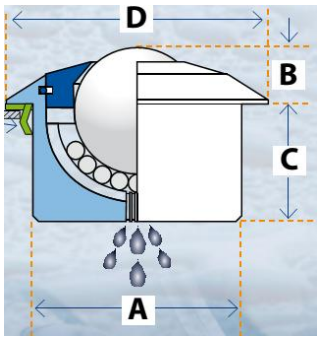



	Max Load kg	Ball Ø	A	B	C	D	Drain holes	Weight kg
MX30	**350**	**30**	**45**	**13.8**	**23**	**55**	**7**	**0.36**
MX45	600	45	62	19	34.5	75	7	0.99



Regular stock items in bold type

Other types available

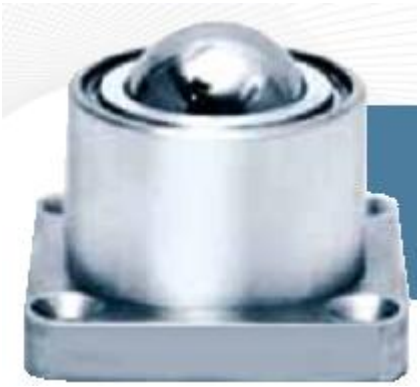

Heavy duty precision machined



Full Acetal



Spring loaded types

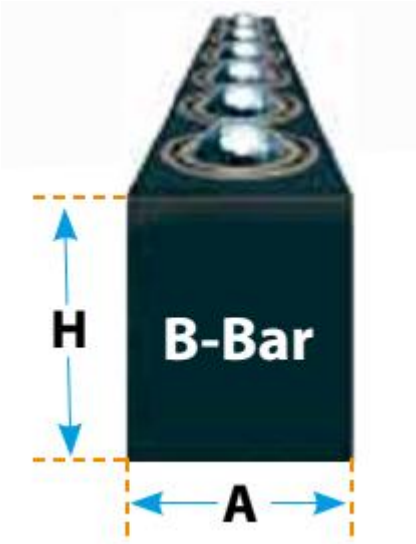

"T" and "B" bars

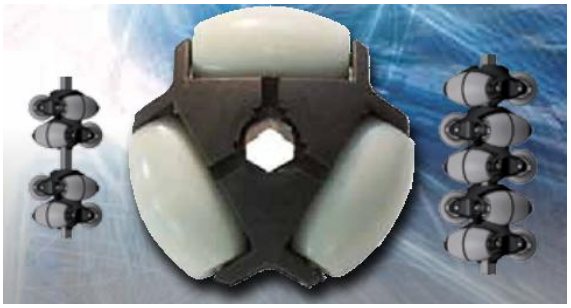

Omni wheel solutions

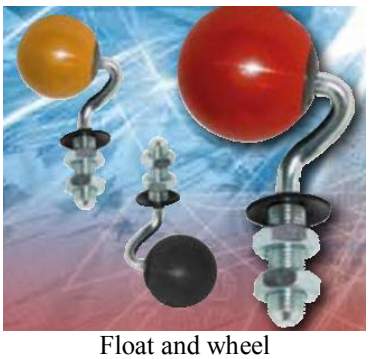

Float and wheel

Hardness conversion

Material hardness of bearing surfaces is critical for smooth running and low friction. Use of lower hardness materials will also result in lower service life due to fatigue failures such as surface flaking. Rockwell C hardness of 58 and above is recommended and conversion of common hardness tests are in the below table.

Rockwell C Scale H_RC	Vickers Hardness Hv	Brienell Hardness H_B		Rockwell Hardness		Shore Hardness H_S
		Standard Ball	Tungsten Carbon Ball	H_RA A Scale	H_RB B Scale	
68	940	-	-	85.6	-	97
66	865	-	-	84.5	-	92
64	800	-	722	83.4	-	88
62	746	-	688	82.3	-	85
60	697	-	654	81.2	-	81
58	653	-	615	80.1	-	78
56	613	-	577	79.0	-	75
54	577	-	543	78.0	-	72
52	544	500	512	76.8	-	69
50	513	475	481	75.9	-	67
48	484	451	455	74.7	-	64
46	548	432	432	73.6	-	62
44	434	409	409	72.5	-	58
42	412	390	390	71.5	-	56
40	392	371	371	70.4	-	54
38	372	353	353	69.4	-	51
36	354	336	336	68.4	(109.0)	49
34	336	319	319	67.4	(108.0)	47
32	318	301	301	99.3	(107/0)	44
30	302	286	286	65.3	(105.5)	42

Fits and tolerance

Fits and tolerance needs to be carefully considered when mating two parts together and is covered in the ISO standard ANSI B4.2.

A clearance fit has a definite gap between the two sizes which makes for easy assembly. The drawback is a loss of precision and potential problems with vibration. An interference fit is where the two sizes always cross over and a mechanical or temperature system is required to put the two parts together. This can create an accurate and robust join but can be impossible to disassemble later. In between these extremes are the transition fits which are suitable for bearings.

In the standard a lettering system is used and the higher the letter is in the alphabet the more interference the fit. A lower case letter is for the shaft and the upper case letter is for the housing. Numbers are also used within each letter with a lower number having a smaller range and more expensive to make. A larger number has a wider range and is more economical to make. The range of sizes for the fit is dependent on the nominal diameter.

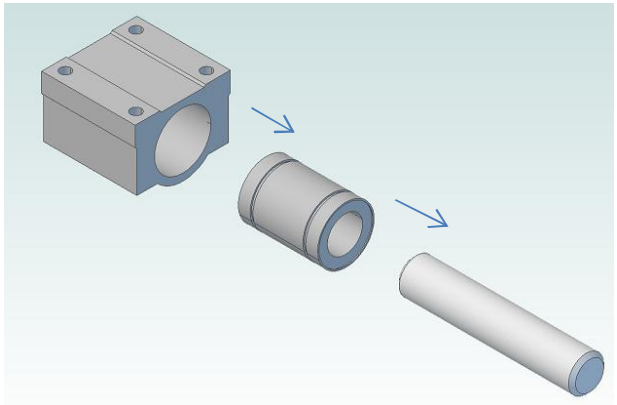

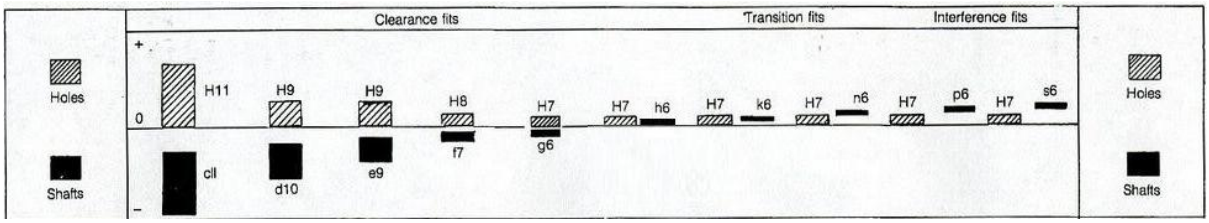

The H7/g6 combination is commonly used for ball bushes and shafting. Transition fits such as H7/j6 are often used for rotary bearings where some mechanical or temperature assistance may be required for assembly disassembly.

Shaft OD tolerance

Nominal Diameter(mm)		Tolerance of Shaft Diameter (µm)																	
		f			g			h				js			j			k		
Over	incl	f5	f6	f7	g5	g6	g7	h5	h6	h7	h8	js5	js6	js7	j5	j6	j7	k5	k6	k7
-	3		-6			-2			0			±2	±3	±5	+2	+4	+6	+4	+6	+10
		-10	-12	-16	-6	-8	-12	-4	-6	-10	-14					-2	-2		0	
3	6		-10			-4			0			±2.5	±4	±5	+3	+6	+8	+6	+9	+13
		-15	-18	-22	-9	-12	-16	-5	-8	-12	-18					-2	-4		+1	
6	10		-6			-5			0			±3	±4.5	±7	+4	+7	+10	+7	+10	+16
		-19	-22	-28	-11	-14	-20	-6	-9	-15	-22					-2	-5		+1	
10	18		-16			-6			0			±4	±5.5	±9	+5	+8	+12	+9	+12	+19
								-8	-11	-18	-27					-3	-6		+1	
18	30		-20			-7			0			±4.5	±6.5	±10	+5	+9	+13	+11	+15	+23
		-29	-33	-41	-16	-20	-28	-9	-13	-21	-33					-4	-8		+2	
30	40		-25			-9			0			±5.5	±8	±12	+6	+11	+15	+13	+18	+27
		-36	-41	-50	-20	-25	-34	-11	-16	-25	-39					-5	-10		+2	
50	80		-30			-10			0			±6.5	±9.5	±15	+6	+12	+18	+15	+21	+32
		-43	-49	-60	-23	-29	-40	-13	-19	-30	-46					-7	-12		+2	
80	120		-36			-12			0			±7.5	±11	±17	+6	+13	+20	+18	+25	+38
		-51	-85	-71	-27	-34	-47	-15	-22	-35	-54					-9	-15		+3	
120	180		-43			-14			0			±9	±12.5	±20	+7	+14	+22	+21	+28	+43
		-61	-68	-83	-32	-39	-54	-18	-25	-40	-63					-1	-18		+3	

Housing ID tolerance

Nominal Diameter(mm)		Tolerance of housing diameter(µm)																	
		H				JS				J			K			M		
Over	incl	H5	H6	H7	H8	JS5	JS6	JS7	JS8	J6	J7	J8	K6	K7	K8	M6	M7	M8
-	3	+4	+6	+20	+25	±2	±3	±5	±7	+2	+4	+6	0	0	0	-2	-2	-2
			0							-4	-6	-8	-6	-10	-14	-8	-12	-16
3	6	+5	+8	+12	+18	±2.5	±4	±6	±9	+5	+6	+10	+2	+3	+8	-1	0	+2
			0							-3	-6	-8	-6	-9	-14	-9	-12	-16
6	10	+6	+9	+15	+22	±3	±4.5	±7	±1	+5	+8	+12	+2	+5	+6	-3	0	+1
			0							-4	-7	-10	-7	-10	-16	-12	-15	-21
10	18	+8	+11	+18	+27	±4	±5.5	±9	±13	+6	+10	+15	+2	+6	+8	-4	0	+2
			0							-5	-8	-12	-9	-12	-19	-15	-18	-25
18	30	+9	+12	+21	+33	±4.5	±6.5	±10	±16	+8	+12	+20	+2	+6	+10	-4	0	+4
			0							-5	-9	-13	-11	-15	-23	-17	-21	-29
30	50	+11	+16	+25	+39	±5.5	±8	±12	±19	+10	+14	+24	+3	+7	+12	-4	0	+5
			0							-6	-11	-15	+13	-18	-27	-20	-25	-34
50	80	+13	+19	+30	+46	±6.5	±9.5	±15	±23	+13	+18	+28	+4	+9	+14	-5	0	+5
			0							-6	-12	-18	-15	-21	-32	-24	-30	-41
80	120	+15	+22	+35	+54	±7.5	±11	±17	±27	+16	+22	+34	+4	+10	+16	-6	0	+6
			0							-6	-13	-20	-18	-25	-38	-28	-35	-48
120	180	+18	+25	+40	+63	±9	±12.5	±20	±31	+18	+26	+41	+4	+12	+20	-8	0	+8
			0							-7	-14	-22	-21	-28	-43	-33	-40	-55