TACO BELL

REPAIR / MAINTENANCE REMODEL

63 OHIO RIVER PLAZA
GALLIPOLIS, OH 45631

ABBREVIATIONS

&	And
∠	Angle
@	At
℄	Centerline
~	Diameter or Round
#	Pound or Number
(E)	Existing
ACOUS	Acoustical
A.D.	Area Drain
ADJ.	Adjustable
AGGR.	Aggregate
AL.	Aluminum
APPROX.	Approximate
ARCH.	Architectural
ASB.	Asbestos
ASPH.	Asphalt
BD.	Board
BITUM.	Bituminous
BLDG.	Building
BLK.	Block
BLKG.	Blocking
BM.	Beam
B.O.C.	Bottom of Concrete
B.O.M.	Bottom of Mullion
B.O.P.	Bottom of Panel
B.O.R.	Bottom of Reveal
BOT.	Bottom
CAB.	Cabinet
C.B.	Catch Basin
CEM.	Cement
CER.	Ceramic
C.I.	Cast Iron
C.G.	Corner Guard
CLG.	Ceiling
CLKG.	Caulking
CLO.	Closet
CLR.	Clear
C.O.	Cased Opening
COL.	Column
C.O.M.	Center of Mullion
CONC.	Concrete
CONN.	Connection
CONSTR.	Construction
CONT.	Continuous
C.O.R.	Center of Reveal
CORR.	Corridor
CTSK.	Countersunk
CNTR.	Counter
CTR.	Center
DBL.	Double
DEPT.	Department
D.F.	Drinking Fountain
DET.	Detail
DIA.	Diameter
DIM.	Dimension
DISP.	Dispenser
DN.	Down
D.O.	Door Opening
DR.	Door
DWR.	Drawer
DS.	Downspout
D.S.P.	Dry Standpipe
DWG	Drawing
E.	East
EA.	Each
E.J.	Expansion Joint
EL.	Elevation
ELEC.	Electrical
ELEV.	Elevator
EMER.	Emergency
ENCL.	Enclosure
E.P.	Electrical Panelboard
EQ.	Equal
EQPT.	Equipment
E.W.C.	Electric Water Cooler
EXST.	Existing
EXPO.	Exposed
EXP.	Expansion
EXT.	Exterior
F.A.	Fire Alarm
F.B.	Flat Bar
F.D.	Floor Drain
FDN.	Foundation
F.E.	Fire Extinguisher
F.E.C.	Fire Extinguisher Cab
F.H.C.	Fire Hose Cabinet
FIN.	Finish
FL.	Floor
FLASH.	Flashing
FLUOR.	Fluorescent
F.O.C.	Face of Concrete
F.O.F.	Face of Finish
F.O.M.	Face of Mullion
F.O.SH.	Face of Sheathing
FPRF.	Fireproof
F.S.	Full Size
FT.	Foot or Feet
FTG.	Footing
FURR.	Furring
FUT.	Future
GA.	Gauge
GALV.	Galvanized
G.B.	Grab Bar
GL.	Glass
GND.	Ground
GR.	Grade
GYP.	Gypsum
H.B.	Hose Bibb
H.C.	Hollow Core
HDWD.	Hardwood
HDWE.	Hardware
H.M.	Hollow Metal
HORIZ.	Horizontal
HR.	Hour
HGT.	Height
I.D.	Inside Diameter (Dim.)
INSUL.	Insulation
INT.	Interior
Jan.	Janitor
JT.	Joint
KIT.	Kitchen
K.O.	Knock Out
LAB.	Laboratory
LAM.	Laminate
LAV.	Lavatory
LKR.	Locker
LT.	Light
MAX.	Maximum
M.C.	Medicine
MECH.	Mechanical
MEMB.	Membrane
MET.	Metal
MFR.	Manufacturer
MH.	Manhole
MIN.	Minimum
MIR.	Mirror
MISC.	Miscellaneous
M.O.	Masonry Opening
MTD.	Mounted
MUL.	Mullion
N.	North
N.I.C.	Not In Contract
NO.	Number
NOM.	Nominal
N.T.S.	Not To Scale
O.A.	Overall
OBS.	Obscure
O.C.	On Center
O.D.	Outside Diameter (Dim.)
OFF.	Office
OPNG.	Opening
OPP.	Opposite
PRCST.	Pre-cast
PL.	Plate
P.LAM.	Plastic Laminate
PLAS.	Plaster
PLYWD.	Plywood
PR.	Pair
PT.	Point
P.T.D	Paper Towel Dispenser
P.T.D/R	Combination Paper Towel
PTN.	Partition
P.T.R.	Paper Towel Receptacle
P.J.	Panel Joint
Q.T.	Quarry Tile
R.	Riser
RAD.	Radius
R.D.	Roof Drain
REF.	Reference
REFR.	Refrigerator
REGTR.	Register
REINF.	Reinforced
REQ.	Required
RESIL.	Resilient
RM.	Room
R.O.	Rough Opening
RWD.	Redwood
R.W.L.	Rain Water Leader
S.	South
SAF	Self Adhered Flashing
S.C.	Solid Core
S.C.D.	Seat Cover Dispenser
SCHED.	Schedule
S.D.	Soap Dispenser
SECT.	Section
SH.	Shelf
SHR.	Shower
SHT.	Sheet
SIM.	Similar
S.N.D.	Sanitary Napkin Disp.
S.N.R.	Sanitary Napkin Recept.
SPEC.	Specification
SQ.	Square
S.ST.	Stainless Steel
S.SK.	Service Sink
STA.	Station
STD.	Standard
STL.	Steel
STOR.	Storage
STRL.	Structural
SUSP.	Suspended
SYS.	Symmetrical
TRD.	Tread
T.B.	Towel Bar
T.C.	Top of Curb
TEL.	Telephone
TER.	Terrazzo
T. & G.	Tongue and Groove
THK.	Thick
T.O.C.	Top of Concrete
T.O.P.	Top of Panel
T.O.R.	Top of Reveal
T.O.RC.	Top of Deep Recess
T.O.M.	Top of Mullion
T.O.W.	Top of Wall
T.P.	Top of Pavement
T.P.D.	Toilet Paper Dispenser
T.V.	Television
T.W.	Top of Wall
TYP.	Typical
UNF.	Unfinished
U.O.N.	Unless Otherwise Noted
UR.	Urinal
VERT.	Vertical
VEST.	Vestibule
W.	West
W/	With
W.C.	Water Closet
WD.	Wood
W/O	Without
WPM	Waterproofing Membrane
WRB	Wheather/Water Resistive Barrier
WSCT.	Wainscot
WT.	Weight

GENERAL DRAWING SYMBOLS

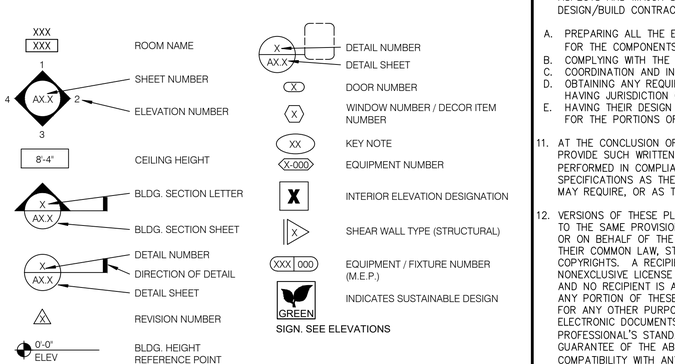

GENERAL PROJECT NOTES

GENERAL NOTES:

1. ALL WORK SHALL BE PERFORMED SO AS TO COMPLY WITH ALL LEGAL, INDUSTRY AND PROJECT-SPECIFIC REQUIREMENTS AND STANDARDS INCLUDING WITHOUT LIMITATION OF THE FOLLOWING:

   A. ALL APPLICABLE BUILDING CODES
   B. ALL APPLICABLE SPECIALTY CODES INCLUDING THE MOST CURRENT ISSUES AND SUPPLEMENTS
   C. THE PROJECT MANUAL AND ASSOCIATED SPECIFICATIONS
   D. THE MANUFACTURER'S REQUIREMENTS OR RECOMMENDATIONS
   E. ALL APPLICABLE LANDLORD BUILDING STANDARDS

2. IN USING THESE PLANS FOR BIDDING OR CONSTRUCTION PURPOSES, ALL CONTRACTORS ARE REQUIRED TO REVIEW AND TREAT THEM AS A WHOLE IN ORDER TO IDENTIFY ALL REQUIREMENTS THAT DIRECTLY OR INDIRECTLY AFFECT THEIR PORTION OF THE WORK, EVEN REQUIREMENTS LOCATED IN SECTIONS DESIGNATED AS APPLICABLE TO OTHER TRADES OR IN DOCUMENTS PROVIDED BY OTHER MEMBERS OF THE PROJECT DESIGN TEAM. UNLESS EXPRESSLY PROVIDED OTHERWISE, THE INTENT IS TO INCLUDE ALL LABOR, MATERIALS, PRODUCTS AND SERVICES NECESSARY OR APPROPRIATE FOR THE COMPLETED PROJECT AS CALLED FOR OR REASONABLY IMPLIED FROM THE PLANS AND SPECIFICATIONS PROVIDED BY THE PROJECT'S DESIGN TEAM. IN CASE OF CONFLICTS OR OMISSIONS, THE AFFECTED CONTRACTOR IS REQUIRED TO EITHER OBTAIN DIRECTION FROM AN APPROPRIATE REPRESENTATIVE OF THE OWNER, OR OTHERWISE TO APPLY THE MORE STRINGENT OR COSTLY STANDARD.

3. IN INTERPRETING THESE PLANS, THE FOLLOWING GENERAL RULES APPLY:

   A. WRITTEN DIMENSIONS SHALL TAKE PRECEDENCE OVER SCALED DRAWINGS
   B. SPECIFIC NOTES AND DETAILS SHALL TAKE PRECEDENCE OVER GENERAL NOTES AND TYPICAL DETAILS
   C. WORK NOT PARTICULARLY SHOWN OR SPECIFIED SHALL BE THE SAME AS SIMILAR PARTS THAT ARE SHOWN AND SPECIFIED
   D. WORK SHOWN AS "NIC" IS FOR REFERENCE ONLY AND THE RESPONSIBILITY OF THE CONTRACTOR ONLY TO THE EXTENT THAT THIS WORK MAY REQUIRE SOME REASONABLE PROTECTION OR COORDINATION EFFORTS.

4. THESE PLANS AND SPECIFICATIONS ARE INTENDED TO REPRESENT ONLY THE FINISHED CONSTRUCTION. THE CONTRACTOR IS SOLELY RESPONSIBLE FOR ALL CONSTRUCTION AND DEMOLITION MEANS, METHODS, TECHNIQUES, SEQUENCES AND PROCEDURES INCLUDING ANY AND ALL SAFETY PRECAUTIONS AND PROGRAMS, AND SHALL INDEMNIFY TO THE FULLEST EXTENT ALLOWED BY LAW THE OWNER AND THE PROJECT DESIGN TEAM FROM AND AGAINST ANY AND ALL RELATED CLAIMS AND LIABILITY.

5. THESE PLANS AND SPECIFICATIONS ARE INTENDED TO SET FORTH THE REQUIREMENTS FOR CONSTRUCTION IN ONLY AN INDUSTRY-STANDARD LEVEL OF QUALITY AND DETAIL, AND THEY ARE INTENDED TO BE SUPPLEMENTED BY APPROPRIATE REQUESTS FOR INFORMATION (RFIs). ERRORS AND OMISSIONS ARE TO BE EXPECTED AND ANTICIPATED, AND ALL CONTRACTORS ARE REQUIRED TO CAREFULLY REVIEW THESE PLANS FOR ERRORS AND OMISSIONS AND TO BRING THESE ERRORS AND OMISSIONS TO THE ATTENTION OF AN APPROPRIATE OWNER REPRESENTATIVE IN A TIMELY MANNER; AND ANY CONTRACTOR WHO FAILS TO DO SO BEFORE BIDDING OR OTHERWISE PROCEEDING ASSUMES THE RISK OF ANY CONSEQUENCES.

6. SCALED DIMENSIONS SHOULD BE CONSIDERED ONLY APPROXIMATE; AND IN ANY EVENT ALL CONTRACTORS PROCEED AT THEIR OWN RISK IF THEY FAIL TO VERIFY AND FIELD MEASURE DIMENSIONS BEFORE PROCEEDING WITH ANY AFFECTED PROCUREMENT, FABRICATION OR CONSTRUCTION.

7. PLANS ARE TO BE CONSIDERED DIAGRAMMATIC IN NATURE AND INTENDED ONLY TO DEMONSTRATE THE RELATIONSHIP AMONG COMPONENT PARTS, AND NOT TO DEPICT SPECIFIC LOCATIONS..

8. CONTRACTOR RFI's ARE INTENDED TO OBTAIN INFORMATION NOT AVAILABLE FROM THE PLANS AND SPECIFICATIONS. RFI's WILL NOT BE PROCESSED THAT CAN BE ANSWERED BY A REVIEW OF THESE DOCUMENTS, THAT REQUEST DIMENSIONS THAT CAN BE OBTAINED FROM THE PLANS BY MATHEMATICAL CALCULATION THAT ARE IN EFFECT A SUBSTITUTION SUBMITTAL, OR THAT SEEK DIRECTION CONCERNING CONSTRUCTION MEANS AND METHODS OR SAFETY PRECAUTIONS. WHERE APPROPRIATE, RFI's SHOULD BE SPECIFIC AS TO WHICH PORTION OF THE PLANS AND SPECIFICATIONS NEEDS CLARIFICATION, AND WHAT INFORMATION IS REQUIRED.

9. NO DEVIATIONS OR OMISSIONS FROM THE REQUIREMENTS OF THE PLANS AND SPECIFICATIONS PROVIDED BY THE PROJECT'S DESIGN TEAM ARE ALLOWED WITHOUT THE EXPRESSED AUTHORIZATION OF AN APPROPRIATE OWNER REPRESENTATIVE, AND THE RESPONSIBLE CONTRACTOR WILL INDEMNIFY AND HOLD HARMLESS THE OWNER AND THE PROJECT DESIGN TEAM FROM AND AGAINST THE CONSEQUENCES OF ANY UNAUTHORIZED DEVIATIONS OR OMISSIONS. SUBSTITUTION SUBMITTALS WILL BE CONSIDERED ONLY IF THE PROPOSED SUBSTITUTION IMPROVES THE QUALITY OF THE PROJECT TO THE OWNER; AND IN NO EVENT WILL THE OWNER BE REQUIRED TO AUTHORIZE A SUBSTITUTION THAT IS NOT EQUAL IN QUALITY TO WHAT IS SPECIFIED.

10. DESIGN/BUILD CONTRACTOR SUBMITTALS WILL BE REVIEWED BY THE PROJECT DESIGN TEAM, IF AT ALL, ONLY FOR CONFORMANCE WITH THE AESTHETIC ASPECTS AND MAJOR SPACE LIMITATIONS OF THE PROJECT; AND EACH DESIGN/BUILD CONTRACTOR IS RESPONSIBLE FOR THE FOLLOWING:

    A. PREPARING ALL THE ENGINEERING AND OTHER DRAWINGS AND SPECIFICATIONS FOR THE COMPONENTS OF ITS DESIGN/BUILD UNDERTAKING.
    B. COMPLYING WITH THE PROJECT'S REQUIREMENTS AND SPACE LIMITATIONS.
    C. COORDINATION AND INTERFACING WITH OTHER TRADES AND CONSULTANTS.
    D. OBTAINING ANY REQUIRED OR APPROPRIATE APPROVALS FROM AUTHORITIES HAVING JURISDICTION OVER THE PROJECT.
    E. HAVING THEIR DESIGN CONSULTANTS SERVE AS THE PROFESSIONAL OF RECORD FOR THE PORTIONS OF WORK WHICH THEY DESIGN.

11. AT THE CONCLUSION OF THE CONSTRUCTION, EACH PRIME CONTRACTOR SHALL PROVIDE SUCH WRITTEN CERTIFICATION THAT THE CONSTRUCTION HAS BEEN PERFORMED IN COMPLIANCE WITH THE PROJECT'S APPROVED PLANS AND SPECIFICATIONS AS THE BUILDING OFFICIAL WITH JURISDICTION OVER THE PROJECT MAY REQUIRE, OR AS THE OWNER MAY REASONABLY REQUEST.

12. VERSIONS OF THESE PLANS PROVIDED IN ANY ELECTRONIC FORM ARE SUBJECT TO THE SAME PROVISION AS THE OTHER INSTRUMENTS OF SERVICE PREPARED BY OR ON BEHALF OF THE PROJECT DESIGN TEAM, INCLUDING WITHOUT LIMITATION THEIR COMMON LAW, STATUTORY OR OTHER RESERVED RIGHTS, INCLUDING COPYRIGHTS. A RECIPIENT IS GRANTED AT MOST A TRANSFERABLE NONEXCLUSIVE LICENSE TO REUSE THE PLANS SOLELY FOR PROJECT PURPOSES; AND NO RECIPIENT IS AUTHORIZED TO USE OR TO ALLOW THE USE OF ALL OR ANY PORTION OF THESE PLANS FOR ANY OTHER PURPOSE, AND ANY OTHER USE FOR ANY OTHER PURPOSE COULD CONSTITUTE ACTIONABLE PLAGIARISM. ANY ELECTRONIC DOCUMENTS WILL BE PROVIDED IN THE RESPONSIBLE DESIGN PROFESSIONAL'S STANDARD FORMATS AND CONVENTIONS AND WITH NO GUARANTEE OF THE ABSENCE OF VIRUSES OR OTHER HARMFUL MATERIAL, OR OF COMPATIBILITY WITH ANY RECIPIENT'S SOFTWARE OR HARDWARE SO THAT ANY USE WITH OR CONVERSION TO THE OTHER FORMS OR CONVENTIONS, OR THE USE WITH ANY PARTICULAR SOFTWARE OR HARDWARE, IS AT THE RECIPIENT'S SOLE RISK.

JOB SITE NOTES:

1. WHERE EXISTING TENANTS/BUSINESSES ARE ADJACENT TO THE JOB SITE/TENANT, THE CONTRACTOR SHALL MINIMIZE CONSTRUCTION NOISE – EXTREMELY NOISY CONSTRUCTION SHALL OCCUR AT NON-TYPICAL BUSINESS HOURS. CONTRACTOR SHOULD NOTIFY BUILDING REPRESENTATIVE OF SPECIAL CIRCUMSTANCES IN ADVANCE PRIOR TO WORK.

2. THE CONTRACTOR AT HIS OWN EXPENSE, SHALL KEEP THE PROJECT AND SURROUNDING AREA FREE FROM DUST AND DEBRIS. THE WORK SHALL BE IN CONFORMANCE WITH THE AIR AND WATER POLLUTION CONTROL STANDARDS AND REGULATIONS OF THE STATE DEPARTMENT OF HEALTH.

3. CONSTRUCTION DEBRIS AND WASTES SHALL BE DEPOSITED AT AN APPROPRIATE SITE. THE CONTRACTOR SHALL INFORM THE BUILDING REPRESENTATIVE OF THE LOCATION OF DISPOSAL SITES.

4. CONTRACTOR SHALL BE RESPONSIBLE FOR THE GENERAL CLEANING OF THE JOB AFTER ITS COMPLETION. WHERE APPLICABLE, CLEANING SHALL INCLUDE, BUT NOT BE LIMITED TO, THE EXTERIOR AND THE INTERIOR OF THE BUILDING, THE PATH OF TRAVEL TO THE JOB SITE, PARKING LOTS, ELEVATORS, LOBBIES, AND CORRIDOR CARPETS.

5. THE CONTRACTOR SHALL PROVIDE PEDESTRIAN PROTECTION, WHERE REQUIRED PER STATE AND LOCAL CODES.

6. IF TRENCHES OR EXCAVATIONS 5'-0" OR MORE IN DEPTH ARE REQUIRED, OBTAIN ISSUANCE OF A BUILDING OR GRADING PERMIT.

7. NO HAZARDOUS MATERIALS SHALL BE USED OR STORED WITHIN THE BUILDING WHICH DOES NOT COMPLY WITH THE LOCAL FIRE AUTHORITY AND STATE & COUNTY REQUIREMENTS.

8. CONTRACTOR SHALL BE RESPONSIBLE FOR BLOCKING OFF SUPPLY AND RETURN AIR GRILLES, DIFFUSERS & DUCTS TO KEEP DUST FROM ENTERING INTO BUILDING AIR DISTRIBUTION SYSTEMS.

9. THE CONTRACTOR SHALL TAKE ALL NECESSARY PRECAUTIONS TO ENSURE THE SAFETY OF THE OCCUPANTS AND WORKERS AT ALL TIMES.

10. THE CONTRACTOR SHALL BE RESPONSIBLE FOR THE COMPLETE SECURITY OF THE BUILDING AND SITE WHILE JOB IS IN PROGRESS AND UNTIL THE JOB IS COMPLETED.

DRAWING NOTES:

1. UNLESS OTHERWISE NOTED OR INDICATED, ALL DIMENSIONS ON THESE DOCUMENTS SHALL BE TO FACE OF CURB, FACE OF CONCRETE OR MASONRY, FACE OF FINISH OR CENTERLINE OF GRIDS.

2. ALL VERTICAL DIMENSIONS SHOWN ARE FROM FLOOR SLAB, U.O.N.

3. DIMENSIONS SHOWN IN FIGURES TAKE PRECEDENCE OVER DIMENSIONS SCALED FROM DRAWINGS. LARGE SCALE DRAWINGS AND DETAILS TAKE PRECEDENCE OVER SMALLER SCALE DRAWINGS.

4. THE TERM "ALIGN", AS USED IN THESE DOCUMENTS, SHALL MEAN TO ACCURATELY LOCATE FINISHES IN THE SAME PLANE.

5. "TYPICAL" AS USED IN THESE DOCUMENTS SHALL MEAN THAT THE CONDITION IS THE SAME OR REPRESENTATIVE FOR ALL SIMILAR CONDITIONS THROUGHOUT, U.O.N.

6. DETAILS ARE USUALLY KEYED AND NOTED "TYPICAL" ONLY ONCE, WHEN THEY FIRST OCCUR AND ARE REPRESENTATIVE OF ALL SIMILAR CONDITIONS THROUGHOUT, U.O.N.

7. COLUMN CENTERLINES (GRID LINES) ARE SHOWN FOR DIMENSIONING PURPOSES.

8. WHERE CONSTRUCTION DETAILS ARE NOT SHOWN OR NOTED FOR ANY PART OF THE WORK, THE DETAILS SHALL BE THE SAME AS FOR OTHER SIMILAR WORK IN THE SAME BUILDING.

INTERIOR / EXTERIOR NOTES:

1. WHERE OCCURS, CONTRACTOR SHALL PATCH ANY EXISTING WALLS AND/OR CEILINGS AS NEEDED TO REFURBISH THE LEASE SPACE AND REPAIR ALL DAMAGES CAUSED BY CONTRACTOR.

2. INTERIOR WALLS AND CEILINGS SHALL BE INSTALLED IN ACCORDANCE TO STATE & LOCAL CODES, INCLUDING REQUIREMENTS FOR FLAME SPREAD AND SMOKE DENSITY RATINGS FOR FINISH MATERIALS.

3. ALL NEW CONSTRUCTION MATERIALS SHALL BE 100% ASBESTOS-FREE.

WORK TO PERFORM PRIOR TO DEMOLTION NOTES:

1. PRIOR TO THE START OF ANY DEMOLITION, THE MECHANICAL CONTRACTOR SHALL, USING INDUSTRY STANDARDS, PERFORM THE FOLLOWING:
   1.1. OBTAIN AND DOCUMENT CFM READINGS OF ALL DIFFUSERS, RETURN AND EXHAUST GRILLES.
   1.2. OBTAIN AND DOCUMENT EXHAUST READINGS OF EXISTING HOODS.
   1.3. DOCUMENT RTU OUTDOOR AIR INTAKE CFMS DURING NON-ECONOMIZER OPERATION.
   1.4. VERIFY AND DOCUMENT THE RTU RELIEF DAMPER SETTINGS.

2. UPON COMPLETIONS OF THE ABOVE TASKS, MECHANICAL CONTRACTOR SHALL REFER TO THE DEMOLITION PLAN AD.1 AND MECHANICAL PLAN SHEET M1.0 FOR ADDITIONAL INFORMATION..

SITE/DRIVE-THRU NOTES:

1. SIGN VENDOR TO REPLACE EXISTING CLEARANCE BAR. REPLACE EXISTING BRANDING ELEMENTS WITH NEW PANEL IN EXISTING CANOPY/OCB. PAINT FINISH TO MATCH EXISTING.
2. EXISTING MENU BOARD TO BE REMOVED AND REPLACED.
3. GC TO INSTALL TWO POST MOUNTED "PICKUP PARKING" SIGNS. PROVIDED BY SIGN VENDOR. COORDINATE EXACT LOCATION WITH CM.

PROJECT SUMMARY

PROJECT DESCRIPTION:

FACILITY UPGRADES AND MINOR BUILDING CONSTRUCTION REPAIRS

BRING ELECTRICAL SERVICE TO CODE

LEGAL JURISDICTION: OH DEPT. OF COMMERCE

BUILDING CODE:
2017 OHIO BUILDING CODE
2017 NATIONAL ELECTRICAL CODE
2017 OHIO PLUMBING CODE
2017 OHIO MECHANICAL CODE
2017 OHIO FIRE CODE
2017 IECC
2009 ICC/ANSI 117.1A

BUILDING AREA: 1974 S.F. (NO CHANGE) ALLOWABLE AREA: 6,000 S.F. SEATING: 62 (NO CHANGE)

LIMITED SPRINKLERED

OCCUPANCY: A2

TYPE CONSTRUCTION: TYPE VB

BUILDING HEIGHT: 21'-6" (NO CHANGE) ALLOWABLE BUILDING HEIGHT: 40'

STORIES: 1 (NO CHANGE) ALLOWABLE STORIES: 1

EMERGENCY LIGHTING: YES

EXITS PROVIDED: 3 (NO CHANGE)

MEANS OF EGRESS WIDTH PROVIDED: 102" MIN. REQUIRED EGRESS WIDTH: 64*0.2" = 12.8"

EXISTING BUILDING AREA AND OCCUPANT LOAD

TYPE	AREA	FACTOR	OCCUPANTS
PUBLIC - DINING ROOM	878 S.F.	1:15 SF	59
NON-PUBLIC	680 S.F.	1:200 SF	4
WALK-IN COOLER	72 S.F.	1:300 SF	1
RESTROOMS/HALLWAY	151 S.F.		
OFFICE	26 S.F.		
UNOCCUPIED	167 S.F.		
TOTAL	1974 S.F.		64

VICINITY MAP

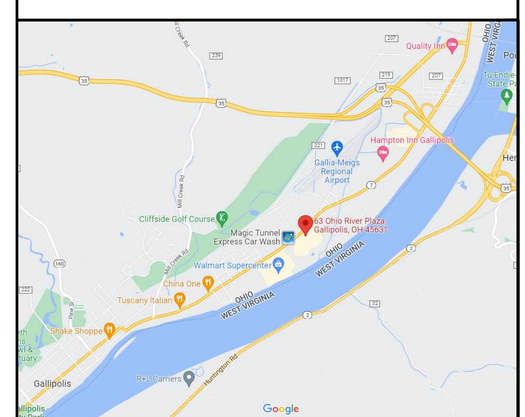

SOURCE: GOOGLE MAPS

SHEET INDEX

GPD GROUP®
Glaus, Pyle, Schomer, Burns & DeHaven, Inc.
520 South Main Street, Suite 2531
Akron, OH 44311
330.572.2100 Fax 330.572.2101

1 ADDENDUM #1	09.01.22
2	
3	
4	
5	

CONTRACT DATE:	05.10.21
BUILDING TYPE:	TYPE M
PLAN VERSION:	-
BRAND DESIGNER:	-
SITE NUMBER:	4320
STORE NUMBER:	2021188.16

TACO BELL

63 OHIO RIVER PLAZA
GALLIPOLIS, OH 45631

REPAIR/ MAINTENANCE REMODEL

TITLE SHEET

T1.0

ASDASD

GENERAL NOTES

1. ALL WORK SPECIFIED AS A DEPARTMENT OF TRANSPORTATION ITEM SHALL BE GOVERNED BY THE OHIO DEPARTMENT OF TRANSPORTATION CONSTRUCTION AND MATERIAL SPECIFICATIONS AS WELL AS THE CURRENT EDITION OF THE LOCAL JURISDICTION STORM WATER MANAGEMENT MANUAL. IT IS THE CONTRACTOR'S RESPONSIBILITY TO POSSESS AND TO BE FAMILIAR WITH APPLICABLE SECTIONS.

2. THESE CONTRACT DRAWINGS SHALL BE MADE AVAILABLE ON SITE AT ALL TIMES AND PRESENTED UPON REQUEST. IF UNFORESEEN STORM WATER POLLUTION IS ENCOUNTERED, ADDITIONAL STORM WATER POLLUTION PREVENTION (SWPP) MEASURES SHALL BE IMPLEMENTED TO MANAGE THE CURRENT SITE CONDITIONS WHICH MAY BE REQUESTED BY THE OWNER, COUNTY ENGINEER, PROJECT ENGINEER OR SOIL AND WATER CONSERVATION SERVICE REPRESENTATIVE AT ANYTIME. SUCH REQUESTS AND CHANGE IN SITE CONDITIONS SHALL BE IMPLEMENTED IMMEDIATELY AT CONTRACTOR'S EXPENSE.

3. ALL STORM WATER POLLUTION PREVENTION PRACTICES SHALL BE INSTALLED BEFORE ANY OTHER EARTH MOVING OCCURS.

4. SEDIMENT BARRIERS SHALL BE INSTALLED DOWNSLOPE OF DISTURBED AREAS. SEDIMENT BARRIERS SHALL BE INSTALLED ALONG LEVEL CONTOURS. MAXIMUM CONTRIBUTING DRAINAGE AREA TO SEDIMENT BARRIERS SHALL BE PER THE CURRENT STATE'S EPA OR THE LOCAL AUTHORITY REQUIREMENTS. COMPOSITE FILTER SOCKS USED IN LIEU OF SILT FENCE SHALL BE A MINIMUM OF 12 INCHES IN DIAMETER.

5. SILT BARRIERS SHALL BE INSTALLED AROUND ALL EXISTING AND NEW STORM INLETS, CATCH BASINS AND YARD DRAINS. INSTALL ROCK CHECK DAMS FOR HEADWALL INLETS FOR STORM WATER POLLUTION PREVENTION.

6. STORM WATER POLLUTION PREVENTION MEASURES SHALL BE INSTALLED AROUND ALL DIRT OR TOPSOIL STOCKPILES AND OTHER TEMPORARILY DISTURBED AREAS AS MAY BE SHOWN ON THESE PLANS AND/OR AS DIRECTED BY THE ENGINEER OR THE LOCAL AUTHORITY HAVING JURISDICTION.

7. SILT BARRIERS, CONSTRUCTION ENTRANCES, AND SILT PERIMETER CONTROLS SHALL REMAIN IN PLACE UNTIL A GOOD STAND OF GRASS HAS BEEN OBTAINED AND/OR PAVING OPERATIONS ARE COMPLETE. CONTRACTOR SHALL KEEP SILT FROM ENTERING ANY STORM DRAINAGE SYSTEM. ONCE SITE HAS BEEN COMPLETELY STABILIZED, ANY SILT IN PIPES AND DRAINAGE SWALES SHALL BE REMOVED WITHIN 10 DAYS.

8. ALL EXISTING WATER COURSES WITHIN THE PROJECT LIMITS SHALL BE TEMPORARILY PROTECTED DURING LAND CLEARING AND GRADING OPERATIONS. SOILS WITHIN 50 FEET OF SAID WATER COURSES SHALL BE STABILIZED WITHIN 2 DAYS OF THE INITIAL CLEARING / GRADING OPERATION.

9. CONSTRUCTION ENTRANCE SHALL BE UTILIZED. IF CONDITIONS ARE SUCH THAT MUD IS COLLECTING ON VEHICLE TIRES, THE TIRES MUST BE CLEANED BEFORE THE VEHICLES ENTER THE PUBLIC ROADWAY. THE SITE ENTRANCE SHALL BE MAINTAINED IN A CONDITION THAT WILL PREVENT THE TRACKING OR FLOW OF MUD ONTO THE PUBLIC RIGHT-OF-WAY. ALL MATERIALS SPILLED, DROPPED, WASHED OR TRACKED FROM VEHICLES ONTO THE ROADWAY MUST BE REMOVED PROMPTLY.

10. IF FOR ANY REASON, THE PROJECT IS SUSPENDED, THE CONTRACTOR SHALL ENSURE THAT ALL INSTALLED EROSION MEASURES ARE FUNCTIONING AND PROPERLY MAINTAINED DURING THIS PERIOD, AND THAT ALL BARE SOILS ARE SEEDED AND MULCHED WITH TEMPORARY SEED MIXTURE.

11. CONCRETE WASHOUT FACILITY (IF APPLICABLE) SHALL BE CONSTRUCTED IN ACCORDANCE WITH PLAN DETAILS AND LOCAL GOVERNING AUTHORITY REGULATIONS AND INSTRUCTIONS.

12. IMPLEMENTATION OF EROSION AND SEDIMENT CONTROLS SHALL CONFORM TO STATE OF OHIO CONSTRUCTION GENERAL PERMIT #OHC000005 AND THE CITY OF GALLIPOLIS CODIFIED ORDINANCES. IF A CONFLICT EXISTS BETWEEN THE TWO REGARDING EROSION AND SEDIMENT CONTROL IMPLEMENTATION, THE MORE RESTRICTIVE SHALL APPLY.

13. DISTURBED AREAS WITHIN 50' OF A STREAM SHALL HAVE PERMANENT STABILIZATION APPLIED WITHIN 2 DAYS OF FINAL GRADE.

14. DISTURBED AREAS WHICH WILL REMAIN DORMANT FOR OVER 1 YEAR OR ARE AT FINAL GRADE SHALL HAVE PERMANENT STABILIZATION APPLIED WITHIN 7 DAYS OF LAST EARTHWORK DISTURBANCE.

INSPECTION NOTES

1. CONTRACTOR SHALL INSPECT ALL SWPP MEASURES DAILY AND LOGGED BY THE CONTRACTOR FOR INSPECTION. LOGGING SHALL BE WEEKLY AND AFTER EVERY 1/2" RAINFALL EVENT. REPAIR AS NECESSARY TO PREVENT EROSION. SILTATION SHALL BE REMOVED FROM AREAS WHERE FAILURES HAVE OCCURRED AND CORRECTIVE ACTION TAKEN WITHIN 24 HOURS TO MAINTAIN ALL SWPP.

2. CONTRACTORS INSPECTOR SHALL BE A QUALIFIED INDIVIDUAL. ONLY A QUALIFIED INSPECTION PERSONNEL IS TO PERFORM THE INSPECTIONS.

3. CONTRACTOR'S INSPECTOR SHALL BE RESPONSIBLE FOR PREPARING AND SIGNING WEEKLY AND ALL INTERMEDIATE EROSION CONTROL INSPECTION REPORTS AFTER EVERY INSPECTION, WHICH INCLUDE BUT NOT LIMITED TO (DISTURBED AREAS, MATERIAL STORAGE AREAS, EROSION AND SEDIMENT CONTROLS; DISCHARGE LOCATIONS AND VEHICLE ENTRANCE/EXIT LOCATIONS). SUCH REPORTS SHALL BE MADE AVAILABLE TO OWNER, ENGINEER AND CITY / STATE OFFICIALS UPON THEIR REQUEST.

4. REPORTS SHALL BE KEPT FOR 3 YEARS AFTER TERMINATION OF THE CONSTRUCTION ACTIVITIES.

5. CONTRACTOR MAY SUBMIT A WAIVER REQUEST TO THE LOCAL AND STATE GOVERNING AUTHORITIES FOR A REDUCTION TO MONTHLY INSPECTIONS IF THE SITE WILL BE STABILIZED AND DORMANT FOR A LONG PERIOD, AND/OR THE RUNOFF IS UNLIKELY DUE TO WEATHER CONDITIONS FOR AN EXTENDED PERIOD OF TIME (FROZEN GROUND).

6. FOR BMPS THAT REQUIRE REPAIR OR MAINTENANCE - NON SEDIMENT POND BMPS ARE TO BE REPAIRED WITHIN 3 DAYS OF INSPECTION AND SEDIMENT PONDS ARE TO BE REPAIRED OR CLEANED OUT WITHIN 10 DAYS OF INSPECTION.

7. FOR BMPS THAT DO NOT MEET THE INTENDED FUNCTION, A NEW BMP SHALL BE INSTALLED WITHIN 10 DAYS OF THE INSPECTION.

8. FOR MISSING BMPS REQUIRED, THE MISSING BMPS SHALL BE INSTALLED WITHIN 10 DAYS OF THE INSPECTION.

SPILLS AND CONTAMINATION

1. CONSTRUCTION PERSONNEL, INCLUDING SUBCONTRACTORS WHO MAY USE OR HANDLE HAZARDOUS OR TOXIC MATERIALS, SHALL BE MADE AWARE OF THE FOLLOWING GENERAL GUIDELINES REGARDING DISPOSAL AND HANDLING OF HAZARDOUS AND CONSTRUCTION WASTES:
   a. PREVENT SPILLS
   a. USE PRODUCTS UP
   b. FOLLOW LABEL DIRECTIONS FOR DISPOSAL
   c. REMOVE LIDS FROM EMPTY BOTTLES AND CANS WHEN DISPOSING IN TRASH
   d. RECYCLE WASTES WHENEVER POSSIBLE
   e. DON'T POUR INTO WATERWAYS, STORM DRAINS OR ONTO THE GROUND
   f. DON'T POUR DOWN THE SINK, DOOR DRAIN OR SEPTIC TANKS
   g. DON'T BURY CHEMICALS OR CONTAINERS
   h. DON'T BURN CHEMICALS OR CONTAINERS
   i. DON'T MIX CHEMICALS TOGETHER

2. ANY DISCHARGE OF PETROLEUM OR PETROLEUM PRODUCTS OF LESS THAN 25 GALLONS ONTO A PERVIOUS SURFACE SHALL BE LEGALLY REMOVED AND PROPERLY TREATED OR PROPERLY DISPOSED OF, OR OTHERWISE REMEDIATED, SO THAT NO CONTAMINATION FROM THE DISCHARGE REMAINS ON-SITE. SPILLS OF 25 GALLONS OR MORE OF PETROLEUM PRODUCTS SHALL BE REPORTED TO THE OHIO EPA, THE LOCAL FIRE DEPARTMENT, AND THE LOCAL EMERGENCY PLANNING COMMITTEE WITHIN 30 MINUTES OF THE DISCOVERY OF THE RELEASE. ALL SPILLS WHICH CONTACT WATERS OF THE STATE MUST BE REPORTED TO THE CURRENT STATE'S EPA.

3. SPILL REPORTING REQUIREMENTS: SPILLS ON PAVEMENT SHALL BE ABSORBED WITH SAWDUST OR KITTY LITTER AND DISPOSED OF WITH THE TRASH AT A LICENSED SANITARY LAND FILL. HAZARDOUS OR INDUSTRIAL WASTES SUCH AS MOST SOLVENTS, GASOLINE, OIL-BASED PAINTS, AND CEMENT CURING COMPOUNDS REQUIRE SPECIAL HANDLING. SPILLS SHALL BE REPORTED TO THE OHIO EPA.

4. CONTAINERS SHALL BE PROVIDED FOR THE PROPER COLLECTION OF ALL WASTE MATERIAL INCLUDING CONSTRUCTION DEBRIS, TRASH, PETROLEUM PRODUCTS AND ANY HAZARDOUS MATERIALS USED ON-SITE. CONTAINERS SHALL BE COVERED AND NOT LEAKING. ALL WASTE MATERIAL SHALL BE DISPOSED OF AT FACILITIES APPROVED FOR THAT MATERIAL. CONSTRUCTION DEMOLITION AND DEBRIS (CD&D) WASTE MUST BE DISPOSED OF AT THE OHIO EPA APPROVED CD&D LAND FILL.

5. PROCESS WASTE WATER/LEACHATE MANAGEMENT : EPA'S CONSTRUCTION GENERAL PERMIT ONLY ALLOWS THE DISCHARGE OF STORM WATER AND DOES NOT INCLUDE OTHER WASTE STREAMS/DISCHARGES SUCH AS VEHICLE AND/OR EQUIPMENT WASHING, ON-SITE SEPTIC LEACHATE CONCRETE WASH OUTS, WHICH ARE CONSIDERED PROCESS WASTEWATERS. ALL PROCESS WASTEWATERS MUST BE COLLECTED AND PROPERLY DISPOSED AT AN APPROVED DISPOSAL FACILITY. IN THE EVENT, LEACHATE OR SEPTAGE IS DISCHARGED; IT MUST BE ISOLATED FOR COLLECTION AND PROPER DISPOSAL AND CORRECTIVE ACTIONS TAKEN TO ELIMINATE THE SOURCE OF WASTE WATER.

6. WASTES GENERATED BY CONSTRUCTION ACTIVITIES (I.E. CONSTRUCTION MATERIALS SUCH AS PAINTS, SOLVENTS, FUELS, CONCRETE, WOOD, ETC) MUST BE DISPOSED OF IN ACCORDANCE WITH LOCAL REGULATIONS. HAZARDOUS AND TOXIC SUBSTANCES ARE USED ON VIRTUALLY ALL CONSTRUCTION SITES. GOOD MANAGEMENT OF THESE SUBSTANCES IS ALWAYS NEEDED.

7. NO CONSTRUCTION RELATED WASTE MATERIALS ARE TO BE BURIED OR BURNED ON-SITE.

8. HANDLING CONSTRUCTION CHEMICALS: MIXING, PUMPING, TRANSFERRING OR OTHER HANDLING OF CONSTRUCTION CHEMICALS SUCH AS FERTILIZER, LIME, ASPHALT, CONCRETE DRYING COMPOUNDS, AND ALL OTHER POTENTIALLY HAZARDOUS MATERIALS SHALL BE PERFORMED IN AN AREA AWAY FROM ANY WATERCOURSE, DITCH OR STORM DRAIN.

9. EQUIPMENT FUELING AND MAINTENANCE, OIL CHANGING, ETC., SHALL BE PERFORMED AWAY FROM WATERCOURSES, DITCHES OR STORM DRAINS, IN AN AREA DESIGNATED FOR THAT PURPOSE. THE DESIGNATED AREA SHALL BE EQUIPPED FOR RECYCLING OIL AND CATCHING SPILLS. SECONDARY CONTAINMENT SHALL BE PROVIDED FOR ALL FUEL OIL STORAGE TANKS. THESE AREAS MUST BE INSPECTED EVERY SEVEN DAYS AND WITHIN 24 HRS. OF A 0.5 INCH OR GREATER RAIN EVENT TO ENSURE THERE ARE NO EXPOSED MATERIALS WHICH WOULD CONTAMINATE STORM WATER. SITE OPERATORS MUST BE AWARE THAT SPILL PREVENTION CONTROL AND COUNTERMEASURES (SPCC) REQUIREMENTS MAY APPLY. AN SPCC PLAN IS REQUIRED FOR SITES WITH ONE SINGLE ABOVE GROUND TANK OF 660 GALLONS OR MORE, ACCUMULATIVE ABOVE GROUND STORAGE OF 1330 GALLONS OR MORE, OR 42,000 GALLONS OF UNDERGROUND STORAGE. CONTAMINATED SOILS MUST BE PROPERLY DISPOSED OF IN ACCORDANCE WITH LOCAL GOVERNING AUTHORITY REGULATIONS. SPCC PLAN AND APPROVALS ARE THE RESPONSIBILITY OF THE CONTRACTOR.

10. CONTAMINATED SOILS: IF SUBSTANCES SUCH AS OIL, DIESEL FUEL, HYDRAULIC FLUID, ANTIFREEZE, ETC. ARE SPILLED, LEAKED, OR RELEASED ONTO THE SOIL, THE SOIL SHOULD BE DUG UP AND DISPOSED OF AT LICENSED SANITARY LAND FILL OR OTHER APPROVED PETROLEUM CONTAMINATED SOIL REMEDIATION FACILITY (NOT A CONSTRUCTION / DEMOLITION DEBRIS LAND FILL). NOTE THOSE STORM WATER RUNOFFS ASSOCIATED WITH CONTAMINATED SOILS ARE NOT BE AUTHORIZED UNDER CURRENT REGULATIONS OF CONSTRUCTION ACTIVITIES.

11. CONTRACTOR SHALL TAKE PREVENTIVE MEASURES FOR WATER DISCHARGES FROM CONTAMINATED SOILS BY ANY MEANS POSSIBLE, INCLUDING THE FOLLOWING:
    11.1. THE USE OF BERMS, TRENCHES, AND PITS TO COLLECT CONTAMINATED RUNOFF AND PREVENT DISCHARGES.
    11.2. PUMPING RUNOFF INTO A SANITARY SEWER (WITH PRIOR WRITTEN APPROVAL OF THE SANITARY SEWER SERVICE OPERATOR) OR INTO A CONTAINER FOR TRANSPORT TO AN APPROPRIATE TREATMENT/DISPOSAL FACILITY.
    11.3. COVERING AREAS OF CONTAMINATION WITH TARPS OR OTHER METHODS THAT PREVENT STORMWATER FROM COMING INTO CONTACT WITH CONTAMINATED MATERIALS.

TEMPORARY SEEDING

1. STRUCTURAL EROSION AND SEDIMENT CONTROL PRACTICES SUCH AS DIVERSIONS AND SEDIMENT TRAPS SHALL BE INSTALLED AND STABILIZED WITH TEMPORARY SEEDING PRIOR TO GRADING THE REST OF THE CONSTRUCTION SITE.

2. TEMPORARY SEEDING / STABILIZATION SHALL BE APPLIED WITHIN THE FOLLOWING TIME FRAMES FOR VARIOUS AREAS OF THE SITE:
   2.1. ANY DISTURBED AREA WITHIN 50 FEET OF A WATERCOURSE AND NOT AT FINAL GRADE SHALL BE SEEDED AND MULCHED WITHIN 2 DAYS OF THE MOST RECENT DISTURBANCE, IF THAT AREA WILL REMAIN IDLE FOR MORE THAN 14 DAYS.
   2.2. ALL CONSTRUCTION ACTIVITIES IN ANY DISTURBED AREA, INCLUDING SOIL STOCKPILES THAT WILL BE IDLE FOR MORE THAN 14 DAYS BUT LESS THAN ONE YEAR, AND NOT WITHIN 50 FEET OF A WATERCOURSE SHALL BE SEEDED AND MULCHED WITHIN 7 DAYS OF THE MOST RECENT DISTURBANCE IN THE AREA.
   2.3. DISTURBED AREAS THAT WILL BE IDLE OVER THE WINTER SHALL BE SEEDED AND MULCHED PRIOR TO NOVEMBER 1.

3. THE SEED BED SHOULD BE PULVERIZED AND LOOSE TO ENSURE THE SUCCESS OF ESTABLISHING VEGETATION. TEMPORARY SEEDING SHOULD NOT BE POSTPONED IF IDEAL SEED BED PREPARATION IS NOT POSSIBLE.

4. TEMPORARY VEGETATION SEEDING RATES SHALL ESTABLISH ADEQUATE STANDS OF VEGETATION, WHICH MAY REQUIRE USE OF SOIL AMENDMENTS. BASE RATES FOR LIME AND FERTILIZER SHALL BE USED.

5. ALL SEED MIXES AND SEEDING RATES USED SHALL BE APPROVED BY THE LOCAL GOVERNING AUTHORITY AND THE OWNER.

6. SEED SHALL BE APPLIED UNIFORMLY WITH A CYCLONE SPREADER, DRILL, CULTIPACKER, SEEDER, OR HYDROSEEDER. WHEN FEASIBLE, SEED THAT HAS BEEN BROADCAST SHALL BE COVERED BY RAKING OR DRAGGING AND THEN LIGHTLY TAMPED INTO PLACE USING A ROLLER OR CULTIPACKER. IF HYDROSEEDING IS USED, THE SEED AND FERTILIZER WILL BE MIXED ON-SITE AND THE SEEDING SHALL BE DONE IMMEDIATELY AND WITHOUT INTERRUPTION.

7. APPLICATIONS OF TEMPORARY SEEDING SHALL INCLUDE MULCH, WHICH SHALL BE APPLIED DURING OR IMMEDIATELY AFTER SEEDING. SEEDINGS MADE DURING OPTIMUM SEEDING DATES ON FAVORABLE, VERY FLAT SOIL CONDITIONS MAY NOT NEED MULCH TO ACHIEVE ADEQUATE STABILIZATION. IF MULCH IS USED, FOLLOW THE REQUIREMENTS AND INSTRUCTIONS IN THE MULCH APPLICATION.

MULCH

1. MULCH AND OTHER APPROPRIATE VEGETATIVE PRACTICES SHALL BE APPLIED TO DISTURBED AREAS WITHIN 7 DAYS OF GRADING IF THE AREA IS TO REMAIN DORMANT (UNDISTURBED) FOR MORE THAN 21 DAYS OR ON AREAS AND PORTIONS OF THE SITE WHICH CAN BE BROUGHT TO FINAL GRADE.

2. MULCH SHALL CONSIST OF ONE OF THE FOLLOWING:
   2.1. STRAW SHALL BE UNROTTED SMALL GRAIN STRAW APPLIED AT THE RATE OF 2 TONS/AC. OR 90 LB./1,000 SQ. FT. (TWO TO THREE BALES) THE STRAW MULCH SHALL BE SPREAD UNIFORMLY BY HAND OR MECHANICALLY SO THE SOIL SURFACE IS COVERED. FOR UNIFORM DISTRIBUTION OF HAND-SPREAD MULCH, DIVIDE AREA INTO APPROXIMATELY 1,000 SQ. FT. SECTIONS AND PLACE TWO 45-LB BALES OF STRAW IN EACH SECTION.
   2.2. WOOD CELLULOSE FIBER SHOULD BE USED AT 2,000 LB.AC, OR 46 LB/1,000 SQ. FT.
   2.3. ACCEPTABLE MULCHES INCLUDE MULCH MATTINGS AND ROLLED EROSION CONTROL PRODUCTS APPLIED ACCORDING TO MANUFACTURER'S RECOMMENDATIONS OR WOOD MULCH/CHIPS APPLIED AT 10-20 TONS/AC.

3. MULCH SHALL BE ANCHORED IMMEDIATELY TO MINIMIZE LOSS BY WIND OR RUNOFF. THE FOLLOWING ARE ACCEPTABLE METHODS FOR ANCHORING MULCH.
   3.1. USE A DISK, CRIMPER, OR SIMILAR TYPE TOOL SET STRAIGHT TO PUNCH OR ANCHOR THE MULCH MATERIAL INTO THE SOIL. STRAW MECHANICALLY ANCHORED SHALL NOT BE FINELY CHOPPED BUT BE LEFT GENERALLY LONGER THAN 6 INCHES.
   3.2. USE MULCH NETTINGS ACCORDING TO THE MANUFACTURER'S RECOMMENDATIONS, FOLLOWING ALL PLACEMENT AND ANCHORING REQUIREMENTS. USE IN AREAS OF WATER CONCENTRATION AND STEEP SLOPES TO HOLD MULCH IN PLACE.
   3.3. FOR STRAW MULCH, SYNTHETIC BINDERS SUCH AS ACRYLIC DLR (AGRI-TAC), DCA-70, PETROSET, TERRA TACK OR EQUAL MAY BE USED AT RATES RECOMMENDED BY THE MANUFACTURER. ALL APPLICATIONS OF SYNTHETIC BINDERS MUST BE CONDUCTED IN SUCH A MANNER WHERE THERE IS NO CONTACT WITH WATERS OF THE STATE.
   3.4. WOOD CELLULOSE FIBER MAY BE USED FOR ANCHORING STRAW. THE FIBER BINDER SHALL BE APPLIED AT A NET DRY WEIGHT OF 750 LB/AC. THE WOOD CELLULOSE FIBER SHALL BE MIXED WITH WATER AND THE MIXTURE SHALL CONTAIN A MAXIMUM OF 50 LB/100 GAL. OF WOOD CELLULOSE FIBER.

DUST CONTROL NOTES

1. DUST CONTROL SHALL BE MAINTAINED THROUGHOUT CONSTRUCTION. IF POSSIBLE GRADING SHALL BE DONE BY PHASING IN ORDER TO MINIMIZE THE AMOUNT OF LAND DISTURBANCE AT ONE TIME. IF PHASING IS NOT AN OPTION, DUST SHALL BE CONTROLLED WITH WATER DURING EARTHWORK OPERATIONS. AFTER EARTHWORK OPERATIONS, THE EXPOSED SOILS SHALL BE COVERED WITH STRAW OR MULCH UNTIL SEEDED.

2. DUST CONTROL OR DUST SUPPRESSANTS MAY BE USED TO PREVENT NUISANCE CONDITIONS WHEN APPROVED BY THE LOCAL AUTHORITY HAVING JURISDICTION. WHEN USED, SUPPRESSANTS SHALL BE APPLIED IN ACCORDANCE WITH THE MANUFACTURER'S SPECIFICATIONS AND IN A MANNER, WHICH PREVENTS A DISCHARGE TO WATERS OF THE STATE. SUFFICIENT DISTANCE MUST BE PROVIDED BETWEEN APPLICATIONS AND NEARBY BRIDGES, CATCH BASINS, AND OTHER WATERWAYS. APPLICATION (EXCLUDING WATER) MAY NOT OCCUR WHEN RAIN IS IMMINENT AS NOTED IN THE SHORT TERM FORECAST. OIL MAY NOT BE APPLIED FOR DUST CONTROL.

3. SUGGESTED METHODS OF CONSTRUCTION DUST CONTROL MAY INCLUDE THE FOLLOWING:
   3.1. CONSTRUCTION SEQUENCING AND DISTURBING ONLY SMALL AREAS AT A TIME CAN GREATLY REDUCE PROBLEMATIC DUST FROM THE SITE. IF LAND MUST BE DISTURBED, ADDITIONAL TEMPORARY STABILIZATION MEASURES SHOULD BE CONSIDERED PRIOR TO DISTURBANCES.
   3.2. APPLY TEMPORARY OR PERMANENT SEEDING AND MULCH TO AREAS THAT WILL REMAIN IDLE FOR OVER 14 DAYS. SAVING EXISTING TREES AND LARGE SHRUBS WILL ALSO REDUSE SOIL AND AIR MOVEMENT ACROSS DISTURBED AREAS.
   3.3. SPRAY DISTURBED SITE WITH WATER UNTIL THE SURFACE IS WET BEFORE AND DURING GRADING AND REPEAT AS NEEDED, ESPECIALLY ON HAUL ROADS AND OTHER HEAVY TRAFFIC ROUTES. WATERING SHALL BE DONE AT A RATE THAT PREVENTS DUST BUT DOES NOT CAUSE SOIL EROSION. WETTING AGENTS MAY BE UTILIZED ACCORDING TO MANUFACTURERS INSTRUCTIONS.
   3.4. GRADED ROADWAYS AND OTHER SUITABLE AREAS MAY BE STABALIZED USING CRUSHED STONE OR COARSE GRAVEL AS SOON AS PRACTICABLE AFTER REACHING AN INTERIM OR FINAL GRADE. CRUSHED STONE OR COARSE GRAVEL CAN BE USED AS A PERMANENT COVER TO PROVIDE CONTROL OF SOIL EMISSIONS.
   3.5. EXISTING WINDBREAK VEGETATION SHALL BE MARKED AND PRESERVED TO THE EXTENT POSSIBLE. SNOW FENCING OR OTHER SUITABLE BARRIER MAY BE PLACED PERPENDICULAR TO PREVAILING AIR CURRENTS AT INTERVALS OF ABOUT 15 TIMES THE BARRIER HEIGHTS TO CONTROL AIR CURRENTS AND BLOWING SOIL.
   3.6. WHEN TEMPORARY DUST CONTROL MEASURES ARE USED; REPETITIVE TREATMENT SHOULD BE APPLIED AS NEED TO ACCOMPLISH SATISFACTORY CONTROL.
   3.7. PAVED AREAS THAT HAVE ACCUMULATED SEDIMENT FROM CONSTRUCTION SHOULD BE CLEANED DAILY, OR AS NEEDED, UTILIZING A STREET SWEEPER OR BUCKET-TYPE ENDLOADER OR SCRAPER.

DEWATERING

DEWATERING REFERS TO THE ACT OF REMOVING AND DISCHARGING WATER FROM EXCAVATED AREAS ON CONSTRUCTION SITES, UTILITY LINE CONSTRUCTION OR FROM SEDIMENT TRAPS OR BASINS ON CONSTRUCTION SITES. GIVEN THE UNIQUE CONDITIONS AT ANY PARTICULAR CONSTRUCTION SITE, ANY OR ALL OF THE PRACTICES MAY APPLY. IN ALL CASES, EVERY EFFORT SHALL BE MADE TO ELIMINATE SEDIMENT POLLUTION ASSOCIATED WITH DEWATERING.

PRACTICES FOR DEWATERING EXCAVATED AREAS

1. PUMPING OF WATER TO AN EXISTING SEDIMENT BASIN OR TRAP IN WHICH THE ENTIRE VOLUME OF WATER FROM THE AREA TO BE DEWATERED CAN BE CONTAINED WITHOUT DISCHARGE TO RECEIVING WATERS.
2. PUMPING OF WATER TO AN EXISTING SEDIMENT BASIN OR TRAP SUCH THAT THE ENTIRE VOLUME OF WATER FROM THE AREA TO BE DEWATERED CAN BE MANAGED WITHOUT EXCEEDING THE DESIGN OUTFLOW FROM THE SEDIMENT CONTROL STRUCTURE.
3. USE OF A STRAW BALE/SILT FENCE PIT OR TRAP AS DESCRIBED HEREIN AND APPROVED BY THE LOCAL GOVERNING AUTHORITY.
4. PUMPING WATER THROUGH A GEOTEXTILE BAG MADE SPECIFICALLY FOR THIS PURPOSE.
5. A WELL-VEGETATIVE FILTER STRIP, CAPABLE OF WITHSTANDING THE VELOCITY OF DISCHARGED WATER WITHOUT ERODING, INCLUDING THE INSTALLATION OF ENERGY DISSIPATION (HAYBALES, RIPRAP OR SHEET OF PLYWOOD) AT THE PUMP DISCHARGE.
6. USE A SUMP PIT TO REDUCE THE PUMPING OF MUD.

DEWATERING OF SEDIMENT TRAPS AND BASINS. IN ALL CASES, WATER REMOVED FROM TRAPS AND BASINS SHALL BE DISCHARGED SO THAT IT PASSES THROUGH A SEDIMENT CONTROL DEVICE APPROVED BY THE LOCAL GOVERNING AUTHORITY PRIOR TO ENTERING RECEIVING WATERS. PRACTICES FOR DEWATERING OF TRAPS AND BASINS MAY INCLUDE SOME OR ALL OF THE FOLLOWING AS MAY BE APPROVED AND APPLICABLE. IN ALL CASES, THE DEWAERING OPERATIONS UTILIZED MUST BE CONTINUOUSLY MONITORED BY THE CONTRACTOR.

1. USE OF A STRAW BALE/SILT FENCE PIT OR TRAP.
   1.1. AN EXCAVATED BASIN (APPLICABLE TO "STRAW BALE/SILT FENCE PIT") MAY BE LINED WITH FILTER FABRIC TO HELP REDUCE SCOUR AND TO PREVENT EROSION OF SOIL FROM WITHIN THE STRUCTURE. IT MAY ALSO BE HELPFUL TO DIRECT THE DISCHARGE ONTO A HAY OR STRAW BALE OR RIPRAP.
   1.2. MEASURES SHALL CONSIST OF STRAW BALES, SILT FENCE AND A STONE OUTLET CONSISTING OF A COMBINATION OF 4-8 INCH RIPRAP AND ½ TO 2 INCH AGGREGATE AND A WET STORAGE PIT ORIENTED AS SHOWN IN DRAWING.
   1.3. THE EXCAVATED AREA SHOULD BE A MINIMUM OF 3 FEET BELOW THE BASE OF THE PERIMETER MEASURES (STRAW BALES OR SILT FENCE).
   1.4. ONCE THE WATER LEVEL NEARS THE CREST OF THE STONE WEIR (EMERGENCY OVERFLOW), THE PUMP MUST BE STOPPED WHILE THE STRUCTURE DRAINS DOWN TO THE ELEVATION OF THE WET STORAGE.
   1.5. THE WET STORAGE PIT MAY BE DEWATERED ONLY AFTER A MINIMUM OF 6 HOURS OF SEDIMENT SETTLING TIME. THIS EFFLUENT SHOULD BE PUMPED ACROSS A WELL-VEGETATED AREA OR THROUGH A SILT FENCE PRIOR TO ENTERING A WATERCOURSE.
   1.6. ONCE THE DEVICE HAS BEEN REMOVED, GROUND CONTOURS SHALL BE RETURNED TO ORIGINAL CONDITION.

2. PUMPING WATER THROUGH A GEOTEXTILE BAG MADE SPECIFICALLY FOR THIS PURPOSE.
   2.1. THE BAG SHALL BE INSTALLED ON A VERY SLIGHT SLOPE SO INCOMING WATER FLOWS DOWNHILL THROUGH THE BAG WITHOUT CREATING MORE EROSION.
   2.2. THE INLET OPENING OF THE DEWATERING DEVICE SHALL HAVE A FILL SPOUT LARGE ENOUGH TO ACCOMMODATE THE DISCHARGE HOSE AND SHALL USE TWO STAINLESS STEEL STRAPS TO SECURE THE HOSE AND PREVENT PUMPED WATER FROM ESCAPING WITHOUT BEING FILTERED.
   2.3. THE BAG SHOULD BE PLACED ON AN AGGREGATE OR HAY BALE BED TO MAXIMIZE WATER FLOW THROUGH THE ENTIRE SURFACE AREA OF THE BAG.
   2.4. THE FILTER BAG IS FULL WHEN IT NO LONGER CAN EFFICIENTLY FILTER SEDIMENT OR PASS WATER AT A REASONABLE RATE.
   2.5. FLOW RATES VARY DEPENDING ON THE SIZE OF THE DEWATERING DEVICE, AMOUNT OF SEDIMENT DISCHARGED INTO THE DEWATERING DEVICE, THE TYPE OF GROUND, ROCK, OR OTHER SUBSTANCE UNDER THE BAG AND THE DEGREE OF THE SLOPE ON WHICH THE BAG LIES. THE FILTER BAG SHOULD BE SIZED TO ACCOMMODATE THE ANTICIPATED FLOW RATES FROM THE TYPE OF PUMP USED. IN ALL CASES FOLLOW THE MANUFACTURERS RECOMMENDATIONS FOR PUMPING FLOW RATES.
   2.6. THE FILTER BAG CAN BE LEFT IN PLACE AFTER CUTTING THE TOP OFF AND SEEDING AND MULCHING THE ACCUMULATED SEDIMENT OR REMOVED AND DISPOSED OF OFFSITE IN AN APPROVED LANDFILL.

3. A WELL-VEGETATIVE FILTER STRIP, CAPABLE OF WITHSTANDING THE VELOCITY OF DISCHARGED WATER WITHOUT ERODING, INCLUDING THE INSTALLATION OF ENERGY DISSIPATION (HAYBALES, RIPRAP OR SHEET OF PLYWOOD) AT THE PUMP DISCHARGE. SUCH OTHER METHODS AS MAY BE APPROVED BY THE LOCAL GOVERNING AUTHORITY.

4. REGARDLESS OF THE TYPE OF TREATMENT, ALWAYS USE A FLOATING SUCTION HOSE TO PUMP THE CLEANER WATER FROM THE TOP OF THE POND, AS THE CLEANER WATER IS PUMPED, THE SUCTION HOSE WILL LOWER AND EVENTUALLY ENCOUNTER SEDIMENT-LADEN WATER. AT THIS POINT CEASE PUMPING OPERATIONS AND REMOVE THE REMAINDER OF THE TRAPPED SEDIMENT WITH MACHINERY. EVEN WHEN PUMPING FROM THE TOP OF THE WATER COLUMN, PROVISIONS MUST STILL BE MADE TO FILTER WATER AS REQUIRED IN THIS SECTION PRIOR TO DISCHARGING TO A STREAM. DURING THE DEWATERING, PERSONNEL SHOULD BE ASSIGNED TO MONITOR PUMPING OPERATIONS AT ALL TIMES TO ENSURE THAT SEDIMENT POLLUTION IS ABATED. PUMPING SEDIMENT-LADEN WATER INTO THE WATERS OF THE STATE WITHOUT FILTRATION IS PROHIBITED.

5. THE DEWATERING DEVICE MUST BE SIZED (AND OPERATED) TO ALLOW PUMPED WATER TO FLOW THROUGH THE FILTERING APPARATUS WITHOUT EXCEEDING THE CAPACITY OF THE STRUCTURE.

GPD GROUP®
Glaus, Pyle, Schomer, Burns & DeHaven, Inc.
520 South Main Street, Suite 2531
Akron, OH 44311
330.572.2100 Fax 330.572.2101

△ ADDENDUM #1	09.01.22
△	
△	
△	
△	

CONTRACT DATE:	05.10.21
BUILDING TYPE:	TYPE M
PLAN VERSION:	-
BRAND DESIGNER:	-
SITE NUMBER:	4320
STORE NUMBER:	2021188.16

TACO BELL

63 OHIO RIVER PLAZA
GALLIPOLIS, OH 45631

REPAIR/ MAINTENANCE REMODEL

SWPP NOTES

C-010

ASDASD

GENERAL NOTES

1. ALL WORK SPECIFIED AS A DEPARTMENT OF TRANSPORTATION ITEM SHALL BE GOVERNED BY THE OHIO DEPARTMENT OF TRANSPORTATION CONSTRUCTION AND MATERIAL SPECIFICATIONS AS WELL AS THE CURRENT EDITION OF THE LOCAL JURISDICTION STORM WATER MANAGEMENT MANUAL. IT IS THE CONTRACTOR'S RESPONSIBILITY TO POSSESS AND TO BE FAMILIAR WITH APPLICABLE SECTIONS.

2. THESE CONTRACT DRAWINGS SHALL BE MADE AVAILABLE ON SITE AT ALL TIMES AND PRESENTED UPON REQUEST. IF UNFORESEEN STORM WATER POLLUTION IS ENCOUNTERED, ADDITIONAL STORM WATER POLLUTION PREVENTION (SWPP) MEASURES SHALL BE IMPLEMENTED TO MANAGE THE CURRENT SITE CONDITIONS WHICH MAY BE REQUESTED BY THE OWNER, COUNTY ENGINEER, PROJECT ENGINEER OR SOIL AND WATER CONSERVATION SERVICE REPRESENTATIVE AT ANYTIME. SUCH REQUESTS AND CHANGE IN SITE CONDITIONS SHALL BE IMPLEMENTED IMMEDIATELY AT CONTRACTOR'S EXPENSE.

3. ALL STORM WATER POLLUTION PREVENTION PRACTICES SHALL BE INSTALLED BEFORE ANY OTHER EARTH MOVING OCCURS.

4. SEDIMENT BARRIERS SHALL BE INSTALLED DOWNSLOPE OF DISTURBED AREAS. SEDIMENT BARRIERS SHALL BE INSTALLED ALONG LEVEL CONTOURS. MAXIMUM CONTRIBUTING DRAINAGE AREA TO SEDIMENT BARRIERS SHALL BE PER THE CURRENT STATE'S EPA OR THE LOCAL AUTHORITY REQUIREMENTS. COMPOSITE FILTER SOCKS USED IN LIEU OF SILT FENCE SHALL BE A MINIMUM OF 12 INCHES IN DIAMETER.

5. SILT BARRIERS SHALL BE INSTALLED AROUND ALL EXISTING AND NEW STORM INLETS, CATCH BASINS AND YARD DRAINS. INSTALL ROCK CHECK DAMS FOR HEADWALL INLETS FOR STORM WATER POLLUTION PREVENTION.

6. STORM WATER POLLUTION PREVENTION MEASURES SHALL BE INSTALLED AROUND ALL DIRT OR TOPSOIL STOCKPILES AND OTHER TEMPORARILY DISTURBED AREAS AS MAY BE SHOWN ON THESE PLANS AND/OR AS DIRECTED BY THE ENGINEER OR THE LOCAL AUTHORITY HAVING JURISDICTION.

7. SILT BARRIERS, CONSTRUCTION ENTRANCES, AND SILT PERIMETER CONTROLS SHALL REMAIN IN PLACE UNTIL A GOOD STAND OF GRASS HAS BEEN OBTAINED AND/OR PAVING OPERATIONS ARE COMPLETE. CONTRACTOR SHALL KEEP SILT FROM ENTERING ANY STORM DRAINAGE SYSTEM. ONCE SITE HAS BEEN COMPLETELY STABILIZED, ANY SILT IN PIPES AND DRAINAGE SWALES SHALL BE REMOVED WITHIN 10 DAYS.

8. ALL EXISTING WATER COURSES WITHIN THE PROJECT LIMITS SHALL BE TEMPORARILY PROTECTED DURING LAND CLEARING AND GRADING OPERATIONS. SOILS WITHIN 50 FEET OF SAID WATER COURSES SHALL BE STABILIZED WITHIN 2 DAYS OF THE INITIAL CLEARING / GRADING OPERATION.

9. CONSTRUCTION ENTRANCE SHALL BE UTILIZED. IF CONDITIONS ARE SUCH THAT MUD IS COLLECTING ON VEHICLE TIRES, THE TIRES MUST BE CLEANED BEFORE THE VEHICLES ENTER THE PUBLIC ROADWAY. THE SITE ENTRANCE SHALL BE MAINTAINED IN A CONDITION THAT WILL PREVENT THE TRACKING OR FLOW OF MUD ONTO THE PUBLIC RIGHT-OF-WAY. ALL MATERIALS SPILLED, DROPPED, WASHED OR TRACKED FROM VEHICLES ONTO THE ROADWAY MUST BE REMOVED PROMPTLY.

10. IF FOR ANY REASON, THE PROJECT IS SUSPENDED, THE CONTRACTOR SHALL ENSURE THAT ALL INSTALLED EROSION MEASURES ARE FUNCTIONING AND PROPERLY MAINTAINED DURING THIS PERIOD, AND THAT ALL BARE SOILS ARE SEEDED AND MULCHED WITH TEMPORARY SEED MIXTURE.

11. CONCRETE WASHOUT FACILITY (IF APPLICABLE) SHALL BE CONSTRUCTED IN ACCORDANCE WITH PLAN DETAILS AND LOCAL GOVERNING AUTHORITY REGULATIONS AND INSTRUCTIONS.

12. IMPLEMENTATION OF EROSION AND SEDIMENT CONTROLS SHALL CONFORM TO STATE OF OHIO CONSTRUCTION GENERAL PERMIT #OHC000005 AND THE CITY OF GALLIPOLIS CODIFIED ORDINANCES. IF A CONFLICT EXISTS BETWEEN THE TWO REGARDING EROSION AND SEDIMENT CONTROL IMPLEMENTATION, THE MORE RESTRICTIVE SHALL APPLY.

13. DISTURBED AREAS WITHIN 50' OF A STREAM SHALL HAVE PERMANENT STABILIZATION APPLIED WITHIN 2 DAYS OF FINAL GRADE.

14. DISTURBED AREAS WHICH WILL REMAIN DORMANT FOR OVER 1 YEAR OR ARE AT FINAL GRADE SHALL HAVE PERMANENT STABILIZATION APPLIED WITHIN 7 DAYS OF LAST EARTHWORK DISTURBANCE.

INSPECTION NOTES

1. CONTRACTOR SHALL INSPECT ALL SWPP MEASURES DAILY AND LOGGED BY THE CONTRACTOR FOR INSPECTION. LOGGING SHALL BE WEEKLY AND AFTER EVERY 1/2" RAINFALL EVENT. REPAIR AS NECESSARY TO PREVENT EROSION. SILTATION SHALL BE REMOVED FROM AREAS WHERE FAILURES HAVE OCCURRED AND CORRECTIVE ACTION TAKEN WITHIN 24 HOURS TO MAINTAIN ALL SWPP.

2. CONTRACTORS INSPECTOR SHALL BE A QUALIFIED INDIVIDUAL. ONLY A QUALIFIED INSPECTION PERSONNEL IS TO PERFORM THE INSPECTIONS.

3. CONTRACTOR'S INSPECTOR SHALL BE RESPONSIBLE FOR PREPARING AND SIGNING WEEKLY AND ALL INTERMEDIATE EROSION CONTROL INSPECTION REPORTS AFTER EVERY INSPECTION, WHICH INCLUDE BUT NOT LIMITED TO (DISTURBED AREAS, MATERIAL STORAGE AREAS, EROSION AND SEDIMENT CONTROLS; DISCHARGE LOCATIONS AND VEHICLE ENTRANCE/EXIT LOCATIONS). SUCH REPORTS SHALL BE MADE AVAILABLE TO OWNER, ENGINEER AND CITY / STATE OFFICIALS UPON THEIR REQUEST.

4. REPORTS SHALL BE KEPT FOR 3 YEARS AFTER TERMINATION OF THE CONSTRUCTION ACTIVITIES.

5. CONTRACTOR MAY SUBMIT A WAIVER REQUEST TO THE LOCAL AND STATE GOVERNING AUTHORITIES FOR A REDUCTION TO MONTHLY INSPECTIONS IF THE SITE WILL BE STABILIZED AND DORMANT FOR A LONG PERIOD, AND/OR THE RUNOFF IS UNLIKELY DUE TO WEATHER CONDITIONS FOR AN EXTENDED PERIOD OF TIME (FROZEN GROUND).

6. FOR BMPS THAT REQUIRE REPAIR OR MAINTENANCE - NON SEDIMENT POND BMPS ARE TO BE REPAIRED WITHIN 3 DAYS OF INSPECTION AND SEDIMENT PONDS ARE TO BE REPAIRED OR CLEANED OUT WITHIN 10 DAYS OF INSPECTION.

7. FOR BMPS THAT DO NOT MEET THE INTENDED FUNCTION, A NEW BMP SHALL BE INSTALLED WITHIN 10 DAYS OF THE INSPECTION.

8. FOR MISSING BMPS REQUIRED, THE MISSING BMPS SHALL BE INSTALLED WITHIN 10 DAYS OF THE INSPECTION.

SPILLS AND CONTAMINATION

1. CONSTRUCTION PERSONNEL, INCLUDING SUBCONTRACTORS WHO MAY USE OR HANDLE HAZARDOUS OR TOXIC MATERIALS, SHALL BE MADE AWARE OF THE FOLLOWING GENERAL GUIDELINES REGARDING DISPOSAL AND HANDLING OF HAZARDOUS AND CONSTRUCTION WASTES:

a. PREVENT SPILLS
a. USE PRODUCTS UP
b. FOLLOW LABEL DIRECTIONS FOR DISPOSAL
c. REMOVE LIDS FROM EMPTY BOTTLES AND CANS WHEN DISPOSING IN TRASH
d. RECYCLE WASTES WHENEVER POSSIBLE
e. DON'T POUR INTO WATERWAYS, STORM DRAINS OR ONTO THE GROUND
f. DON'T POUR DOWN THE SINK, DOOR DRAIN OR SEPTIC TANKS
g. DON'T BURY CHEMICALS OR CONTAINERS
h. DON'T BURN CHEMICALS OR CONTAINERS
i. DON'T MIX CHEMICALS TOGETHER

2. ANY DISCHARGE OF PETROLEUM OR PETROLEUM PRODUCTS OF LESS THAN 25 GALLONS ONTO A PERVIOUS SURFACE SHALL BE LEGALLY REMOVED AND PROPERLY TREATED OR PROPERLY DISPOSED OF, OR OTHERWISE REMEDIATED, SO THAT NO CONTAMINATION FROM THE DISCHARGE REMAINS ON-SITE. SPILLS OF 25 GALLONS OR MORE OF PETROLEUM PRODUCTS SHALL BE REPORTED TO THE OHIO EPA, THE LOCAL FIRE DEPARTMENT, AND THE LOCAL EMERGENCY PLANNING COMMITTEE WITHIN 30 MINUTES OF THE DISCOVERY OF THE RELEASE. ALL SPILLS WHICH CONTACT WATERS OF THE STATE MUST BE REPORTED TO THE CURRENT STATE'S EPA.

3. SPILL REPORTING REQUIREMENTS: SPILLS ON PAVEMENT SHALL BE ABSORBED WITH SAWDUST OR KITTY LITTER AND DISPOSED OF WITH THE TRASH AT A LICENSED SANITARY LAND FILL. HAZARDOUS OR INDUSTRIAL WASTES SUCH AS MOST SOLVENTS, GASOLINE, OIL-BASED PAINTS, AND CEMENT CURING COMPOUNDS REQUIRE SPECIAL HANDLING. SPILLS SHALL BE REPORTED TO THE OHIO EPA.

4. CONTAINERS SHALL BE PROVIDED FOR THE PROPER COLLECTION OF ALL WASTE MATERIAL INCLUDING CONSTRUCTION DEBRIS, TRASH, PETROLEUM PRODUCTS AND ANY HAZARDOUS MATERIALS USED ON-SITE. CONTAINERS SHALL BE COVERED AND NOT LEAKING. ALL WASTE MATERIAL SHALL BE DISPOSED OF AT FACILITIES APPROVED FOR THAT MATERIAL. CONSTRUCTION DEMOLITION AND DEBRIS (CD&D) WASTE MUST BE DISPOSED OF AT THE OHIO EPA APPROVED CD&D LAND FILL.

5. PROCESS WASTE WATER/LEACHATE MANAGEMENT : EPA'S CONSTRUCTION GENERAL PERMIT ONLY ALLOWS THE DISCHARGE OF STORM WATER AND DOES NOT INCLUDE OTHER WASTE STREAMS/DISCHARGES SUCH AS VEHICLE AND/OR EQUIPMENT WASHING, ON-SITE SEPTIC LEACHATE CONCRETE WASH OUTS, WHICH ARE CONSIDERED PROCESS WASTEWATERS. ALL PROCESS WASTEWATERS MUST BE COLLECTED AND PROPERLY DISPOSED AT AN APPROVED DISPOSAL FACILITY. IN THE EVENT, LEACHATE OR SEPTAGE IS DISCHARGED; IT MUST BE ISOLATED FOR COLLECTION AND PROPER DISPOSAL AND CORRECTIVE ACTIONS TAKEN TO ELIMINATE THE SOURCE OF WASTE WATER.

6. WASTES GENERATED BY CONSTRUCTION ACTIVITIES (I.E. CONSTRUCTION MATERIALS SUCH AS PAINTS, SOLVENTS, FUELS, CONCRETE, WOOD, ETC) MUST BE DISPOSED OF IN ACCORDANCE WITH LOCAL REGULATIONS. HAZARDOUS AND TOXIC SUBSTANCES ARE USED ON VIRTUALLY ALL CONSTRUCTION SITES. GOOD MANAGEMENT OF THESE SUBSTANCES IS ALWAYS NEEDED.

7. NO CONSTRUCTION RELATED WASTE MATERIALS ARE TO BE BURIED OR BURNED ON-SITE.

8. HANDLING CONSTRUCTION CHEMICALS: MIXING, PUMPING, TRANSFERRING OR OTHER HANDLING OF CONSTRUCTION CHEMICALS SUCH AS FERTILIZER, LIME, ASPHALT, CONCRETE DRYING COMPOUNDS, AND ALL OTHER POTENTIALLY HAZARDOUS MATERIALS SHALL BE PERFORMED IN AN AREA AWAY FROM ANY WATERCOURSE, DITCH OR STORM DRAIN.

9. EQUIPMENT FUELING AND MAINTENANCE, OIL CHANGING, ETC., SHALL BE PERFORMED AWAY FROM WATERCOURSES, DITCHES OR STORM DRAINS, IN AN AREA DESIGNATED FOR THAT PURPOSE. THE DESIGNATED AREA SHALL BE EQUIPPED FOR RECYCLING OIL AND CATCHING SPILLS. SECONDARY CONTAINMENT SHALL BE PROVIDED FOR ALL FUEL OIL STORAGE TANKS. THESE AREAS MUST BE INSPECTED EVERY SEVEN DAYS AND WITHIN 24 HRS. OF A 0.5 INCH OR GREATER RAIN EVENT TO ENSURE THERE ARE NO EXPOSED MATERIALS WHICH WOULD CONTAMINATE STORM WATER. SITE OPERATORS MUST BE AWARE THAT SPILL PREVENTION CONTROL AND COUNTERMEASURES (SPCC) REQUIREMENTS MAY APPLY. AN SPCC PLAN IS REQUIRED FOR SITES WITH ONE SINGLE ABOVE GROUND TANK OF 660 GALLONS OR MORE, ACCUMULATIVE ABOVE GROUND STORAGE OF 1330 GALLONS OR MORE, OR 42,000 GALLONS OF UNDERGROUND STORAGE. CONTAMINATED SOILS MUST BE PROPERLY DISPOSED OF IN ACCORDANCE WITH LOCAL GOVERNING AUTHORITY REGULATIONS. SPCC PLAN AND APPROVALS ARE THE RESPONSIBILITY OF THE CONTRACTOR.

10. CONTAMINATED SOILS: IF SUBSTANCES SUCH AS OIL, DIESEL FUEL, HYDRAULIC FLUID, ANTIFREEZE, ETC. ARE SPILLED, LEAKED, OR RELEASED ONTO THE SOIL, THE SOIL SHOULD BE DUG UP AND DISPOSED OF AT LICENSED SANITARY LAND FILL OR OTHER APPROVED PETROLEUM CONTAMINATED SOIL REMEDIATION FACILITY (NOT A CONSTRUCTION / DEMOLITION DEBRIS LAND FILL). NOTE THOSE STORM WATER RUNOFFS ASSOCIATED WITH CONTAMINATED SOILS ARE NOT BE AUTHORIZED UNDER CURRENT REGULATIONS OF CONSTRUCTION ACTIVITIES.

11. CONTRACTOR SHALL TAKE PREVENTIVE MEASURES FOR WATER DISCHARGES FROM CONTAMINATED SOILS BY ANY MEANS POSSIBLE, INCLUDING THE FOLLOWING:
    - 11.1. THE USE OF BERMS, TRENCHES, AND PITS TO COLLECT CONTAMINATED RUNOFF AND PREVENT DISCHARGES.
    - 11.2. PUMPING RUNOFF INTO A SANITARY SEWER (WITH PRIOR WRITTEN APPROVAL OF THE SANITARY SEWER SERVICE OPERATOR) OR INTO A CONTAINER FOR TRANSPORT TO AN APPROPRIATE TREATMENT/DISPOSAL FACILITY.
    - 11.3. COVERING AREAS OF CONTAMINATION WITH TARPS OR OTHER METHODS THAT PREVENT STORMWATER FROM COMING INTO CONTACT WITH CONTAMINATED MATERIALS.

TEMPORARY SEEDING

1. STRUCTURAL EROSION AND SEDIMENT CONTROL PRACTICES SUCH AS DIVERSIONS AND SEDIMENT TRAPS SHALL BE INSTALLED AND STABILIZED WITH TEMPORARY SEEDING PRIOR TO GRADING THE REST OF THE CONSTRUCTION SITE.

2. TEMPORARY SEEDING / STABILIZATION SHALL BE APPLIED WITHIN THE FOLLOWING TIME FRAMES FOR VARIOUS AREAS OF THE SITE:
    - 2.1. ANY DISTURBED AREA WITHIN 50 FEET OF A WATERCOURSE AND NOT AT FINAL GRADE SHALL BE SEEDED AND MULCHED WITHIN 2 DAYS OF THE MOST RECENT DISTURBANCE, IF THAT AREA WILL REMAIN IDLE FOR MORE THAN 14 DAYS.
    - 2.2. ALL CONSTRUCTION ACTIVITIES IN ANY DISTURBED AREA, INCLUDING SOIL STOCKPILES THAT WILL BE IDLE FOR MORE THAN 14 DAYS BUT LESS THAN ONE YEAR, AND NOT WITHIN 50 FEET OF A WATERCOURSE SHALL BE SEEDED AND MULCHED WITHIN 7 DAYS OF THE MOST RECENT DISTURBANCE IN THE AREA.
    - 2.3. DISTURBED AREAS THAT WILL BE IDLE OVER THE WINTER SHALL BE SEEDED AND MULCHED PRIOR TO NOVEMBER 1.

3. THE SEED BED SHOULD BE PULVERIZED AND LOOSE TO ENSURE THE SUCCESS OF ESTABLISHING VEGETATION. TEMPORARY SEEDING SHOULD NOT BE POSTPONED IF IDEAL SEED BED PREPARATION IS NOT POSSIBLE.

4. TEMPORARY VEGETATION SEEDING RATES SHALL ESTABLISH ADEQUATE STANDS OF VEGETATION, WHICH MAY REQUIRE USE OF SOIL AMENDMENTS. BASE RATES FOR LIME AND FERTILIZER SHALL BE USED.

5. ALL SEED MIXES AND SEEDING RATES USED SHALL BE APPROVED BY THE LOCAL GOVERNING AUTHORITY AND THE OWNER.

6. SEED SHALL BE APPLIED UNIFORMLY WITH A CYCLONE SPREADER, DRILL, CULTIPACKER, SEEDER, OR HYDROSEEDER. WHEN FEASIBLE, SEED THAT HAS BEEN BROADCAST SHALL BE COVERED BY RAKING OR DRAGGING AND THEN LIGHTLY TAMPED INTO PLACE USING A ROLLER OR CULTIPACKER. IF HYDROSEEDING IS USED, THE SEED AND FERTILIZER WILL BE MIXED ON-SITE AND THE SEEDING SHALL BE DONE IMMEDIATELY AND WITHOUT INTERRUPTION.

7. APPLICATIONS OF TEMPORARY SEEDING SHALL INCLUDE MULCH, WHICH SHALL BE APPLIED DURING OR IMMEDIATELY AFTER SEEDING. SEEDINGS MADE DURING OPTIMUM SEEDING DATES ON FAVORABLE, VERY FLAT SOIL CONDITIONS MAY NOT NEED MULCH TO ACHIEVE ADEQUATE STABILIZATION. IF MULCH IS USED, FOLLOW THE REQUIREMENTS AND INSTRUCTIONS IN THE MULCH APPLICATION.

MULCH

1. MULCH AND OTHER APPROPRIATE VEGETATIVE PRACTICES SHALL BE APPLIED TO DISTURBED AREAS WITHIN 7 DAYS OF GRADING IF THE AREA IS TO REMAIN DORMANT (UNDISTURBED) FOR MORE THAN 21 DAYS OR ON AREAS AND PORTIONS OF THE SITE WHICH CAN BE BROUGHT TO FINAL GRADE.

2. MULCH SHALL CONSIST OF ONE OF THE FOLLOWING:
    - 2.1. STRAW SHALL BE UNROTTED SMALL GRAIN STRAW APPLIED AT THE RATE OF 2 TONS/AC. OR 90 LB./1,000 SQ. FT. (TWO TO THREE BALES) THE STRAW MULCH SHALL BE SPREAD UNIFORMLY BY HAND OR MECHANICALLY SO THE SOIL SURFACE IS COVERED. FOR UNIFORM DISTRIBUTION OF HAND-SPREAD MULCH, DIVIDE AREA INTO APPROXIMATELY 1,000 SQ. FT. SECTIONS AND PLACE TWO 45-LB BALES OF STRAW IN EACH SECTION.
    - 2.2. WOOD CELLULOSE FIBER SHOULD BE USED AT 2,000 LB.AC, OR 46 LB/1,000 SQ. FT.
    - 2.3. ACCEPTABLE MULCHES INCLUDE MULCH MATTINGS AND ROLLED EROSION CONTROL PRODUCTS APPLIED ACCORDING TO MANUFACTURER'S RECOMMENDATIONS OR WOOD MULCH/CHIPS APPLIED AT 10-20 TONS/AC.

3. MULCH SHALL BE ANCHORED IMMEDIATELY TO MINIMIZE LOSS BY WIND OR RUNOFF. THE FOLLOWING ARE ACCEPTABLE METHODS FOR ANCHORING MULCH.
    - 3.1. USE A DISK, CRIMPER, OR SIMILAR TYPE TOOL SET STRAIGHT TO PUNCH OR ANCHOR THE MULCH MATERIAL INTO THE SOIL. STRAW MECHANICALLY ANCHORED SHALL NOT BE FINELY CHOPPED BUT BE LEFT GENERALLY LONGER THAN 6 INCHES.
    - 3.2. USE MULCH NETTINGS ACCORDING TO THE MANUFACTURER'S RECOMMENDATIONS, FOLLOWING ALL PLACEMENT AND ANCHORING REQUIREMENTS. USE IN AREAS OF WATER CONCENTRATION AND STEEP SLOPES TO HOLD MULCH IN PLACE.
    - 3.3. FOR STRAW MULCH, SYNTHETIC BINDERS SUCH AS ACRYLIC DLR (AGRI-TAC), DCA-70, PETROSET, TERRA TACK OR EQUAL MAY BE USED AT RATES RECOMMENDED BY THE MANUFACTURER. ALL APPLICATIONS OF SYNTHETIC BINDERS MUST BE CONDUCTED IN SUCH A MANNER WHERE THERE IS NO CONTACT WITH WATERS OF THE STATE.
    - 3.4. WOOD CELLULOSE FIBER MAY BE USED FOR ANCHORING STRAW. THE FIBER BINDER SHALL BE APPLIED AT A NET DRY WEIGHT OF 750 LB/AC. THE WOOD CELLULOSE FIBER SHALL BE MIXED WITH WATER AND THE MIXTURE SHALL CONTAIN A MAXIMUM OF 50 LB/100 GAL. OF WOOD CELLULOSE FIBER.

DUST CONTROL NOTES

1. DUST CONTROL SHALL BE MAINTAINED THROUGHOUT CONSTRUCTION. IF POSSIBLE GRADING SHALL BE DONE BY PHASING IN ORDER TO MINIMIZE THE AMOUNT OF LAND DISTURBANCE AT ONE TIME. IF PHASING IS NOT AN OPTION, DUST SHALL BE CONTROLLED WITH WATER DURING EARTHWORK OPERATIONS. AFTER EARTHWORK OPERATIONS, THE EXPOSED SOILS SHALL BE COVERED WITH STRAW OR MULCH UNTIL SEEDED.

2. DUST CONTROL OR DUST SUPPRESSANTS MAY BE USED TO PREVENT NUISANCE CONDITIONS WHEN APPROVED BY THE LOCAL AUTHORITY HAVING JURISDICTION. WHEN USED, SUPPRESSANTS SHALL BE APPLIED IN ACCORDANCE WITH THE MANUFACTURER'S SPECIFICATIONS AND IN A MANNER, WHICH PREVENTS A DISCHARGE TO WATERS OF THE STATE. SUFFICIENT DISTANCE MUST BE PROVIDED BETWEEN APPLICATIONS AND NEARBY BRIDGES, CATCH BASINS, AND OTHER WATERWAYS. APPLICATION (EXCLUDING WATER) MAY NOT OCCUR WHEN RAIN IS IMMINENT AS NOTED IN THE SHORT TERM FORECAST. OIL MAY NOT BE APPLIED FOR DUST CONTROL.

3. SUGGESTED METHODS OF CONSTRUCTION DUST CONTROL MAY INCLUDE THE FOLLOWING:
    - 3.1. CONSTRUCTION SEQUENCING AND DISTURBING ONLY SMALL AREAS AT A TIME CAN GREATLY REDUCE PROBLEMATIC DUST FROM THE SITE. IF LAND MUST BE DISTURBED, ADDITIONAL TEMPORARY STABILIZATION MEASURES SHOULD BE CONSIDERED PRIOR TO DISTURBANCES.
    - 3.2. APPLY TEMPORARY OR PERMANENT SEEDING AND MULCH TO AREAS THAT WILL REMAIN IDLE FOR OVER 14 DAYS. SAVING EXISTING TREES AND LARGE SHRUBS WILL ALSO REDUSE SOIL AND AIR MOVEMENT ACROSS DISTURBED AREAS.
    - 3.3. SPRAY DISTURBED SITE WITH WATER UNTIL THE SURFACE IS WET BEFORE AND DURING GRADING AND REPEAT AS NEEDED, ESPECIALLY ON HAUL ROADS AND OTHER HEAVY TRAFFIC ROUTES. WATERING SHALL BE DONE AT A RATE THAT PREVENTS DUST BUT DOES NOT CAUSE SOIL EROSION. WETTING AGENTS MAY BE UTILIZED ACCORDING TO MANUFACTURERS INSTRUCTIONS.
    - 3.4. GRADED ROADWAYS AND OTHER SUITABLE AREAS MAY BE STABALIZED USING CRUSHED STONE OR COARSE GRAVEL AS SOON AS PRACTICABLE AFTER REACHING AN INTERIM OR FINAL GRADE. CRUSHED STONE OR COARSE GRAVEL CAN BE USED AS A PERMANENT COVER TO PROVIDE CONTROL OF SOIL EMISSIONS.
    - 3.5. EXISTING WINDBREAK VEGETATION SHALL BE MARKED AND PRESERVED TO THE EXTENT POSSIBLE. SNOW FENCING OR OTHER SUITABLE BARRIER MAY BE PLACED PERPENDICULAR TO PREVAILING AIR CURRENTS AT INTERVALS OF ABOUT 15 TIMES THE BARRIER HEIGHTS TO CONTROL AIR CURRENTS AND BLOWING SOIL.
    - 3.6. WHEN TEMPORARY DUST CONTROL MEASURES ARE USED; REPETITIVE TREATMENT SHOULD BE APPLIED AS NEED TO ACCOMPLISH SATISFACTORY CONTROL.
    - 3.7. PAVED AREAS THAT HAVE ACCUMULATED SEDIMENT FROM CONSTRUCTION SHOULD BE CLEANED DAILY, OR AS NEEDED, UTILIZING A STREET SWEEPER OR BUCKET-TYPE ENDLOADER OR SCRAPER.

DEWATERING

DEWATERING REFERS TO THE ACT OF REMOVING AND DISCHARGING WATER FROM EXCAVATED AREAS ON CONSTRUCTION SITES, UTILITY LINE CONSTRUCTION OR FROM SEDIMENT TRAPS OR BASINS ON CONSTRUCTION SITES. GIVEN THE UNIQUE CONDITIONS AT ANY PARTICULAR CONSTRUCTION SITE, ANY OR ALL OF THE PRACTICES MAY APPLY. IN ALL CASES, EVERY EFFORT SHALL BE MADE TO ELIMINATE SEDIMENT POLLUTION ASSOCIATED WITH DEWATERING.

PRACTICES FOR DEWATERING EXCAVATED AREAS
1. PUMPING OF WATER TO AN EXISTING SEDIMENT BASIN OR TRAP IN WHICH THE ENTIRE VOLUME OF WATER FROM THE AREA TO BE DEWATERED CAN BE CONTAINED WITHOUT DISCHARGE TO RECEIVING WATERS.
2. PUMPING OF WATER TO AN EXISTING SEDIMENT BASIN OR TRAP SUCH THAT THE ENTIRE VOLUME OF WATER FROM THE AREA TO BE DEWATERED CAN BE MANAGED WITHOUT EXCEEDING THE DESIGN OUTFLOW FROM THE SEDIMENT CONTROL STRUCTURE.
3. USE OF A STRAW BALE/SILT FENCE PIT OR TRAP AS DESCRIBED HEREIN AND APPROVED BY THE LOCAL GOVERNING AUTHORITY.
4. PUMPING WATER THROUGH A GEOTEXTILE BAG MADE SPECIFICALLY FOR THIS PURPOSE.
5. A WELL-VEGETATIVE FILTER STRIP, CAPABLE OF WITHSTANDING THE VELOCITY OF DISCHARGED WATER WITHOUT ERODING, INCLUDING THE INSTALLATION OF ENERGY DISSIPATION (HAYBALES, RIPRAP OR SHEET OF PLYWOOD) AT THE PUMP DISCHARGE.
6. USE A SUMP PIT TO REDUCE THE PUMPING OF MUD.

DEWATERING OF SEDIMENT TRAPS AND BASINS. IN ALL CASES, WATER REMOVED FROM TRAPS AND BASINS SHALL BE DISCHARGED SO THAT IT PASSES THROUGH A SEDIMENT CONTROL DEVICE APPROVED BY THE LOCAL GOVERNING AUTHORITY PRIOR TO ENTERING RECEIVING WATERS. PRACTICES FOR DEWATERING OF TRAPS AND BASINS MAY INCLUDE SOME OR ALL OF THE FOLLOWING AS MAY BE APPROVED AND APPLICABLE. IN ALL CASES, THE DEWAERING OPERATIONS UTILIZED MUST BE CONTINUOUSLY MONITORED BY THE CONTRACTOR.

1. USE OF A STRAW BALE/SILT FENCE PIT OR TRAP.
    - 1.1. AN EXCAVATED BASIN (APPLICABLE TO "STRAW BALE/SILT FENCE PIT") MAY BE LINED WITH FILTER FABRIC TO HELP REDUCE SCOUR AND TO PREVENT EROSION OF SOIL FROM WITHIN THE STRUCTURE. IT MAY ALSO BE HELPFUL TO DIRECT THE DISCHARGE ONTO A HAY OR STRAW BALE OR RIPRAP.
    - 1.2. MEASURES SHALL CONSIST OF STRAW BALES, SILT FENCE AND A STONE OUTLET CONSISTING OF A COMBINATION OF 4-8 INCH RIPRAP AND ½ TO 2 INCH AGGREGATE AND A WET STORAGE PIT ORIENTED AS SHOWN IN DRAWING.
    - 1.3. THE EXCAVATED AREA SHOULD BE A MINIMUM OF 3 FEET BELOW THE BASE OF THE PERIMETER MEASURES (STRAW BALES OR SILT FENCE).
    - 1.4. ONCE THE WATER LEVEL NEARS THE CREST OF THE STONE WEIR (EMERGENCY OVERFLOW), THE PUMP MUST BE STOPPED WHILE THE STRUCTURE DRAINS DOWN TO THE ELEVATION OF THE WET STORAGE.
    - 1.5. THE WET STORAGE PIT MAY BE DEWATERED ONLY AFTER A MINIMUM OF 6 HOURS OF SEDIMENT SETTLING TIME. THIS EFFLUENT SHOULD BE PUMPED ACROSS A WELL-VEGETATED AREA OR THROUGH A SILT FENCE PRIOR TO ENTERING A WATERCOURSE.
    - 1.6. ONCE THE DEVICE HAS BEEN REMOVED, GROUND CONTOURS SHALL BE RETURNED TO ORIGINAL CONDITION.

2. PUMPING WATER THROUGH A GEOTEXTILE BAG MADE SPECIFICALLY FOR THIS PURPOSE.
    - 2.1. THE BAG SHALL BE INSTALLED ON A VERY SLIGHT SLOPE SO INCOMING WATER FLOWS DOWNHILL THROUGH THE BAG WITHOUT CREATING MORE EROSION.
    - 2.2. THE INLET OPENING OF THE DEWATERING DEVICE SHALL HAVE A FILL SPOUT LARGE ENOUGH TO ACCOMMODATE THE DISCHARGE HOSE AND SHALL USE TWO STAINLESS STEEL STRAPS TO SECURE THE HOSE AND PREVENT PUMPED WATER FROM ESCAPING WITHOUT BEING FILTERED.
    - 2.3. THE BAG SHOULD BE PLACED ON AN AGGREGATE OR HAY BALE BED TO MAXIMIZE WATER FLOW THROUGH THE ENTIRE SURFACE AREA OF THE BAG.
    - 2.4. THE FILTER BAG IS FULL WHEN IT NO LONGER CAN EFFICIENTLY FILTER SEDIMENT OR PASS WATER AT A REASONABLE RATE.
    - 2.5. FLOW RATES VARY DEPENDING ON THE SIZE OF THE DEWATERING DEVICE, AMOUNT OF SEDIMENT DISCHARGED INTO THE DEWATERING DEVICE, THE TYPE OF GROUND, ROCK, OR OTHER SUBSTANCE UNDER THE BAG AND THE DEGREE OF THE SLOPE ON WHICH THE BAG LIES. THE FILTER BAG SHOULD BE SIZED TO ACCOMMODATE THE ANTICIPATED FLOW RATES FROM THE TYPE OF PUMP USED. IN ALL CASES FOLLOW THE MANUFACTURERS RECOMMENDATIONS FOR PUMPING FLOW RATES.
    - 2.6. THE FILTER BAG CAN BE LEFT IN PLACE AFTER CUTTING THE TOP OFF AND SEEDING AND MULCHING THE ACCUMULATED SEDIMENT OR REMOVED AND DISPOSED OF OFFSITE IN AN APPROVED LANDFILL.

3. A WELL-VEGETATIVE FILTER STRIP, CAPABLE OF WITHSTANDING THE VELOCITY OF DISCHARGED WATER WITHOUT ERODING, INCLUDING THE INSTALLATION OF ENERGY DISSIPATION (HAYBALES, RIPRAP OR SHEET OF PLYWOOD) AT THE PUMP DISCHARGE. SUCH OTHER METHODS AS MAY BE APPROVED BY THE LOCAL GOVERNING AUTHORITY.

4. REGARDLESS OF THE TYPE OF TREATMENT, ALWAYS USE A FLOATING SUCTION HOSE TO PUMP THE CLEANER WATER FROM THE TOP OF THE POND. AS THE CLEANER WATER IS PUMPED, THE SUCTION HOSE WILL LOWER AND EVENTUALLY ENCOUNTER SEDIMENT-LADEN WATER. AT THIS POINT CEASE PUMPING OPERATIONS AND REMOVE THE REMAINDER OF THE TRAPPED SEDIMENT WITH MACHINERY. EVEN WHEN PUMPING FROM THE TOP OF THE WATER COLUMN, PROVISIONS MUST STILL BE MADE TO FILTER WATER AS REQUIRED IN THIS SECTION PRIOR TO DISCHARGING TO A STREAM. DURING THE DEWATERING, PERSONNEL SHOULD BE ASSIGNED TO MONITOR PUMPING OPERATIONS AT ALL TIMES TO ENSURE THAT SEDIMENT POLLUTION IS ABATED. PUMPING SEDIMENT-LADEN WATER INTO THE WATERS OF THE STATE WITHOUT FILTRATION IS PROHIBITED.

5. THE DEWATERING DEVICE MUST BE SIZED (AND OPERATED) TO ALLOW PUMPED WATER TO FLOW THROUGH THE FILTERING APPARATUS WITHOUT EXCEEDING THE CAPACITY OF THE STRUCTURE.

PERMANENT SEEDING

1. SUBSOILER, PLOW, OR OTHER IMPLEMENT SHALL BE USED TO REDUCE SOIL COMPACTION AND ALLOW MAXIMUM INFILTRATION. (MAXIMUM INFILTRATION WILL HELP CONTROL BOTH RUNOFF RATE AND WATER QUALITY.) SUBSOILING SHOULD BE DONE WHEN THE SOIL MOISTURE IS LOW ENOUGH TO ALLOW THE SOIL TO CRACK OR FRACTURE. SUBSOILING SHALL NOT BE DONE ON SLIP-PRONE AREAS WHERE SOIL PREPARATION SHOULD BE LIMITED TO WHAT IS NECESSARY FOR ESTABLISHING VEGETATION.

2. THE SITE SHALL BE GRADED AS NEEDED TO PERMIT THE USE OF CONVENTIONAL EQUIPMENT FOR SEEDBED PREPARATION AND SEEDING.

3. TOPSOIL SHALL BE APPLIED WHERE NEEDED TO ESTABLISH VEGETATION.

4. AGRICULTURAL GROUND LIMESTONE SHALL BE APPLIED TO ACID SOIL AS RECOMMENDED BY A SOIL TEST. IN LIEU OF A SOIL TEST, LIME SHALL BE APPLIED AT THE RATE OF 100 POUNDS PER 1,000 SQ. FT. OR 2 TONS PER ACRE.

5. FERTILIZER SHALL BE APPLIED AS RECOMMENDED BY A SOIL TEST. IN PLACE OF A SOIL TEST, FERTILIZER SHALL BE APPLIED AT A RATE OF 25 POUNDS PER 1,000 SQ. FT. OR 1,000 POUNDS PER ACRE OF A 10-10-10 OR 12-12-12 ANALYSES.

6. THE LIME AND FERTILIZER SHALL BE WORKED INTO THE SOIL WITH A DISK HARROW, SPRING-TOOTH HARROW, OR OTHER SUITABLE FIELD IMPLEMENT TO A DEPTH OF 3 INCHES. ON SLOPING LAND, THE SOIL SHALL BE WORKED ON THE CONTOUR.

7. ALL SEED MIXES AND SEEDING RATES USED SHALL BE APPROVED BY THE LOCAL GOVERNING AUTHORITY AND THE OWNER.

8. SEEDING SHOULD BE DONE MARCH 1 TO MAY 31 OR AUGUST 1 TO SEPTEMBER 30. IF SEEDING OCCURS OUTSIDE OF THE ABOVE-SPECIFIED DATES, ADDITIONAL MULCH AND IRRIGATION MAY BE REQUIRED TO ENSURE A MINIMUM OF 80% GERMINATION. TILLAGE FOR SEEDBED PREPARATION SHOULD BE DONE WHEN THE SOIL IS DRY ENOUGH TO CRUMBLE AND NOT FORM RIBBONS WHEN COMPRESSED BY HAND. FOR WINTER SEEDING, SEE THE FOLLOWING SECTION ON DORMANT SEEDING.

9. SEEDING SHOULD NOT BE MADE FROM OCTOBER 1 THROUGH NOVEMBER 20. DURING THIS PERIOD, THE SEEDS ARE LIKELY TO GERMINATE BUT PROBABLY WILL NOT BE ABLE TO SURVIVE THE WINTER.

10. THE FOLLOWING METHODS MAY BE USED FOR "DORMANT SEEDING":
    - 10.1. FROM OCTOBER 1 THROUGH NOVEMBER 20, PREPARE THE SEEDBED, ADD THE REQUIRED AMOUNTS OF LIME AND FERTILIZER, THEN MULCH AND ANCHOR.
    - 10.2. FROM NOVEMBER 20 THROUGH MARCH 15, WHEN SOIL CONDITIONS PERMIT, PREPARE THE SEEDBED, LIME AND FERTILIZE, APPLY THE SELECTED SEED MIXTURE, MULCH AND ANCHOR. INCREASE THE SEEDING RATES BY 50% FOR THIS TYPE OF SEEDING.
    - 10.3. APPLY SEED UNIFORMLY WITH A CYCLONE SEEDER, DRILL, CULTIPACKER SEEDER, OR HYDRO-SEEDER (SLURRY MAY INCLUDE SEED AND FERTILIZER) ON A FIRM, MOIST SEEDBED.
    - 10.4. WHERE FEASIBLE, EXCEPT WHEN A CULTIPACKER TYPE SEEDER IS USED, THE SEEDBED SHOULD BE FIRMED FOLLOWING SEEDING OPERATIONS WITH A CULTIPACKER. ROLLER, OR LIGHT DRAG. ON SLOPING LAND, SEEDING OPERATIONS SHOULD BE ON THE CONTOUR WHERE FEASIBLE.

11. PERMANENT SEEDING SHALL INCLUDE IRRIGATION TO ESTABLISH VEGETATION DURING DRY WEATHER OR ON ADVERSE SITE CONDITIONS, WHICH REQUIRE ADEQUATE MOISTURE FOR SEED GERMINATION AND PLANT GROWTH. IRRIGATION SHALL BE MONITORED TO PREVENT EROSION AND DAMAGE TO SEEDED AREAS FROM EXCESSIVE RUNOFF.

GPD GROUP®
Glaus, Pyle, Schomer, Burns & DeHaven, Inc.

520 South Main Street, Suite 2531
Akron, OH 44311
330.572.2100 Fax 330.572.2101

△
△
△
△
△

CONTRACT DATE: 05.10.21
BUILDING TYPE: TYPE M
PLAN VERSION: -
BRAND DESIGNER: -
SITE NUMBER: 4320
STORE NUMBER: 2021188.16

TACO BELL

63 OHIO RIVER PLAZA
GALLIPOLIS, OH 45631

TACO BELL

REPAIR/
MAINTENANCE
REMODEL

SWPP NOTES

C-010

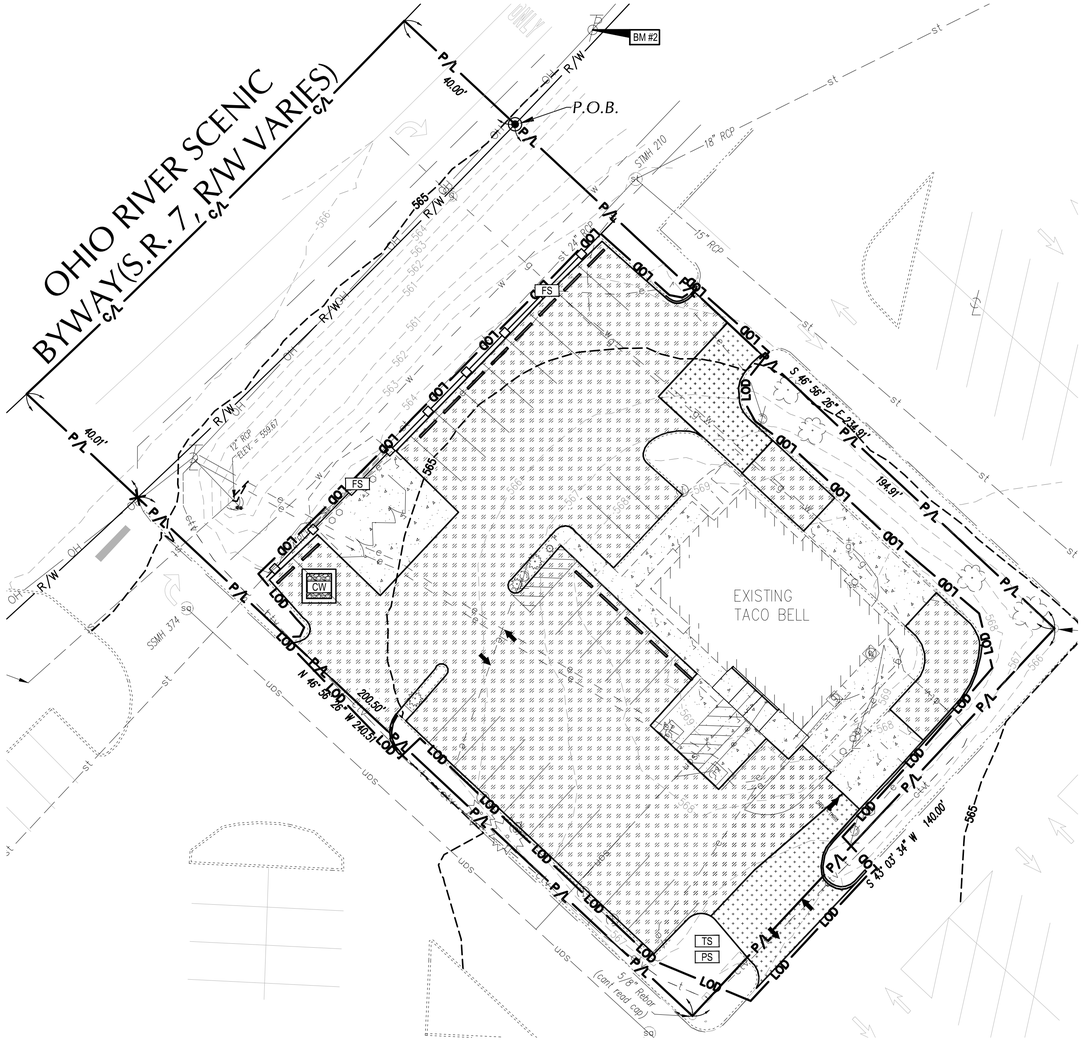

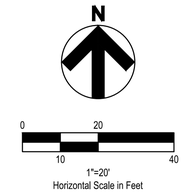

LEGEND

(SEE SHEET C-001 FOR GENERAL LEGEND)

PROPOSED COMPOSITE FILTER REFER TO DETAIL SHEET C-501

LOD — PROJECT LIMITS OF DISTURBANCE

PROPOSED CONCRETE WASHOUT FACILITY REFER TO DETAIL SHEET C-501

SWPP KEYNOTES

- TS TEMPORARY SEEDING
- PS PERMANENT SEEDING
- FS COMPOSITE FILTER SOCK
- CW CONCRETE WASHOUT AREA

OHIO811.org Before You Dig

BENCHMARKS:

STATE PLANE GRID NORTH, NAD 83 (2011) OHIO SOUTH ZONE.
ELEVATIONS ARE NAVD 88, GEOID 18. TIED BY GPS TO THE O.D.O.T. VRS.

BENCHMARK #1 – N BOLT ON LIGHT POLE BASE
N= 300651, E= 2063167
*NOTE – LIGHTPOLE IS SOUTHEAST OF SURVEYED SITE.
ELEVATION=569.68

BENCHMARK #2 – SPIKE FOUND IN POLE
N= 301014, E= 2063030
ELEVATION=565.56

CONSTRUCTION SEQUENCE

1. DURING PRECONSTRUCTION MEETING ALL EROSION & SEDIMENT CONTROL FACILITIES & PROCEDURES SHALL BE DISCUSSED. A GENERAL CONSTRUCTION SEQUENCE FOLLOWS AND MAY NEED TO BE UPDATED BY THE CONTRACTOR TO SUIT THE SPECIFICS OF THE SITE AND INTENDED CONTRACTOR SPECIFIC SEQUENCING.
   - 1.1. CONTRACTOR SHALL UTILIZE EXISTING SITE ENTRANCE AS MEANS OF CONSTRUCTION ENTRANCE.
   - 1.2. INSTALL SILT PERIMETER CONTROLS AS SHOWN ON PLANS. SILT PERIMETER CONTROLS SHALL BE INSTALLED LEVEL, ALONG THE CONTOURS, WITH ENDS TURNED UPSLOPE TO PREVENT CONCENTRATED FLOW AT THE SILT PERIMETER CONTROLS.
   - 1.3. UTILIZE DUST CONTROL MEASURES AS REQUIRED TO MINIMIZE AIR-BORNE POLLUTION BY METHODS APPROVED BY THE AUTHORIZING EPA OFFICE.
   - 1.4. FOLLOWING COMPLETION OF PAVEMENT INSTALLATION, BEGIN LANDSCAPE INSTALLATION.
   - 1.5. COMPLETE SITEWORK, PAVEMENT MARKINGS AND FINAL CLEAN-UP. RESEED ANY AREAS THAT MAY REQUIRE ATTENTION IMMEDIATELY. NOTE THAT LAWN AREAS WILL NOT BE DEEMED STABLE UNTIL A MINIMUM 80% VEGETATIVE DENSITY HAS BEEN ACHIEVED.
   - 1.6. MAINTAIN EROSION & SEDIMENTATION CONTROL MEASURES UNTIL THE SITE HAS BEEN COMPLETELY STABILIZED. ALL AREAS OF VEGETATIVE SURFACE, WHETHER PERMANENT OR TEMPORARY, SHALL BE CONSIDERED TO BE IN PLACE AND FUNCTIONAL WHEN THE REQUIRED UNIFORM RATE OF COVERAGE (80%) IS OBTAINED.
   - 1.7. REMOVE SEDIMENT CONTROLS.

PROJECT DESCRIPTION

THIS SITE IS AN EXISTING TACO BELL BUILDING THAT IS BEING RENOVATED. THE SCOPE OF WORK INCLUDES LIMITED CURB AND FULL DEPTH ASPHALT REPLACEMENT AND MILLING AND RESURFACING OF THE EXISTING LOT.

PROJECT COMPLETION STATISTICS

PARCEL SIZE:	0.762 ACRES
TOTAL DISTURBED AREA:	0.50 ACRES

EXISTING LAND USE FOR THE SITE IS HAS NOT CHANGED. THERE IS AN INSIGNIFICANT REDUCTION OF IMPERVIOUS AREA.

PROJECT LOCATION:

LATITUDE	LONGITUDE
38.82558°	-82.16803°

WETLAND INFORMATION:
THERE ARE NO WETLANDS ON THIS SITE.

FIRST AND SUBSEQUENT RECEIVING STREAM:
INITIAL RECEIVING WATER IS AN UNNAMED CHANNEL AND THE SUBSEQUENT RECEIVING WATER IS THE OHIO RIVER.

POST CONSTRUCTION WQv / BMP DESCRIPTION
NO POST CONSTRUCTION WATER QUALITY MEASURES ARE REQUIRED FOR THIS SITE.

OWNER CONTACT:
DAN PEYTON
DIRECTOR OF CONSTRUCTION & DEV.
AMPLER DEVELOPMENT
DPEYTON@AMPLERGROUP.COM

ANTICIPATED TIMING:

CONSTRUCTION BEGIN:	TBD
CONSTRUCTION COMPLETE:	TBD

CONTRACTOR: T.B.D. _____
CONTACT: _____
PHONE NUMBER: _____

CONTRACTOR SHALL MAINTAIN A CONSTRUCTION LOG DOCUMENTING ALL GRADING AND STABILIZATION ACTIVITIES.

GPD GROUP®
Glaus, Pyle, Schomer, Burns & DeHaven, Inc.
520 South Main Street, Suite 2531
Akron, OH 44311
330.572.2100 Fax 330.572.2101

CONTRACT DATE:	05.10.21
BUILDING TYPE:	TYPE M
PLAN VERSION:	-
BRAND DESIGNER:	-
SITE NUMBER:	4320
STORE NUMBER:	2021188.16

TACO BELL

63 OHIO RIVER PLAZA
GALLIPOLIS, OH 45631

REPAIR/ MAINTENANCE REMODEL

SWPP PLAN

C-011

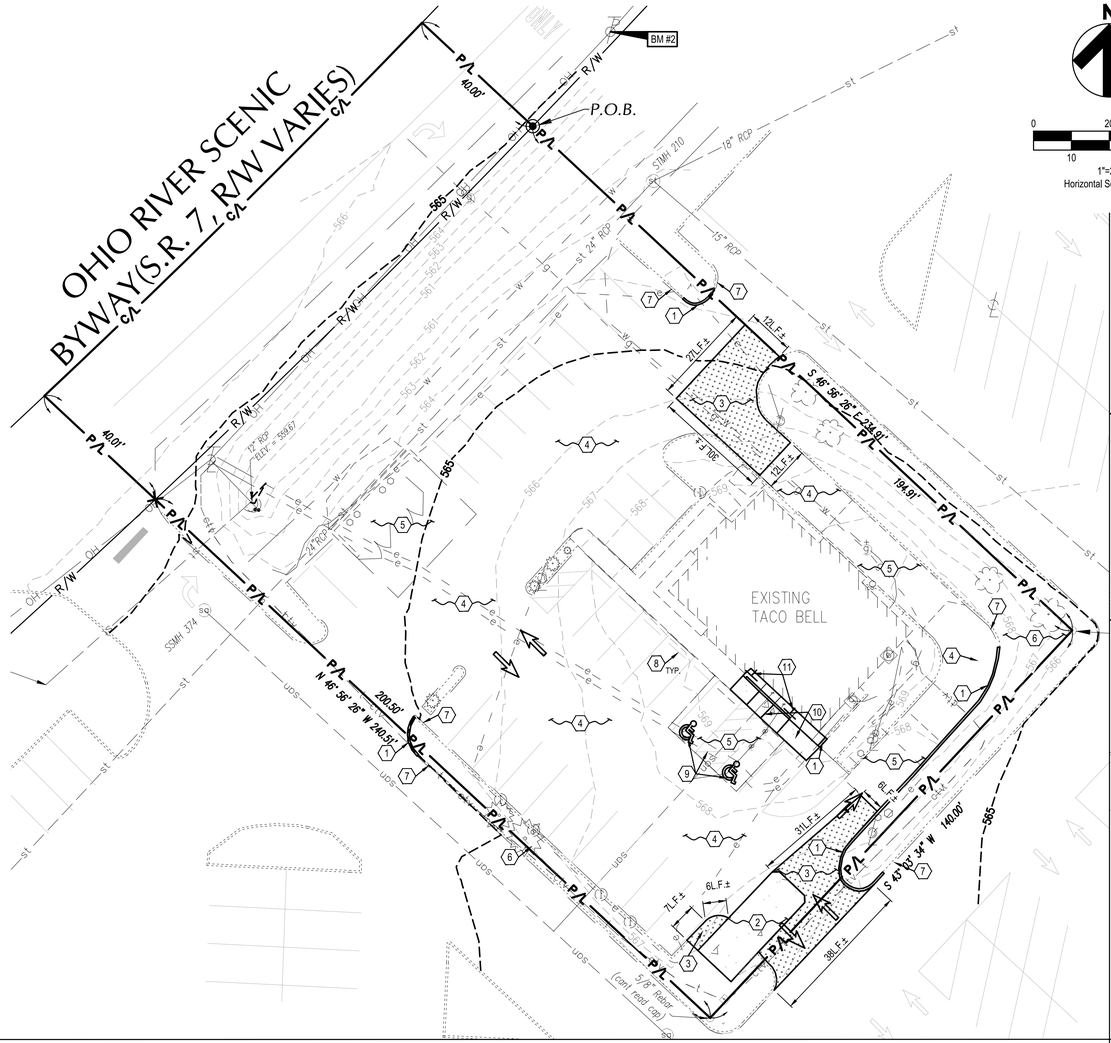

1 EXISTING CONDITIONS AND DEMOLITION PLAN

1" = 20'

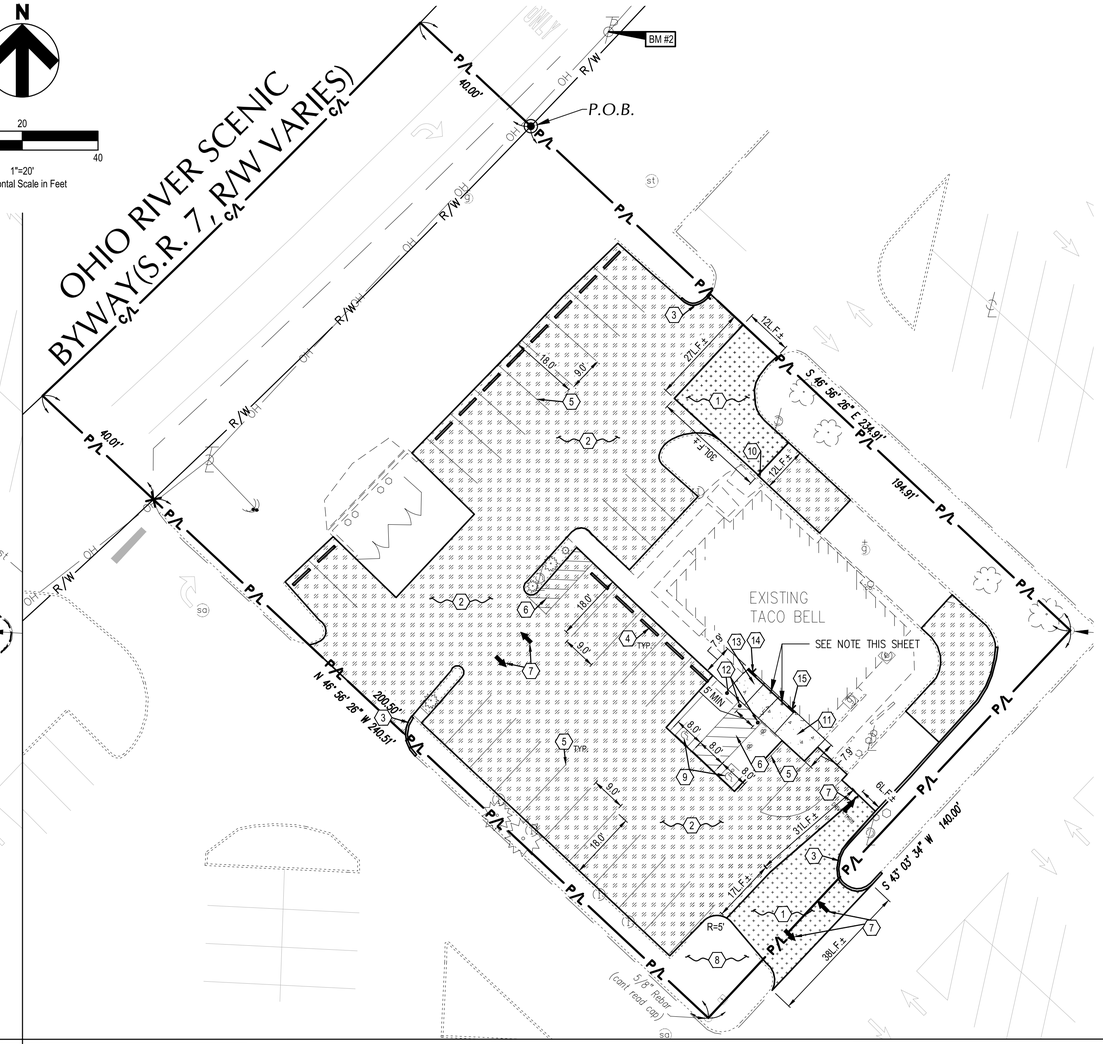

2 SITE PLAN

1" = 20'

N

0 20

10 40

1"=20'

Horizontal Scale in Feet

DEMOLITION KEYNOTES

1. EXISTING CURB TO BE SAWCUT AND REMOVED.
2. EXISTING CONCRETE PAVEMENT TO BE REMOVED.
3. EXISTING ASPHALT PAVEMENT TO BE SAWCUT AND REMOVED (FULL DEPTH).
4. EXISTING ASPHALT TO BE MILLED AND FILLED PER RESURFACED ASPHALT PAVEMENT DETAIL ON SHEET C-501.
5. EXISTING ADA STALLS TO REMAIN.
6. EXISTING LANDSCAPING TO REMAIN AND BE PROTECTED THROUGHOUT CONSTRUCTION.
7. EXISTING CURB TO REMAIN AND BE PROTECTED THROUGHOUT CONSTRUCTION.
8. EXISTING WHEELSTOPS TO BE REMOVED DURING RESURFACING. CONTRACTOR MAY BE PERMITTED TO REUSE EXISTING WHEELSTOPS IN GOOD CONDITION. SEE DEMOLITION NOTE 19 ON SHEET C-001.
9. EXISTING PAVEMENT MARKINGS TO BE REMOVED PER DEMOLITION NOTE 18 ON SHEET C-001.
10. EXISTING ADA ACCESSIBLE RAMP AND CONCRETE CURBED WALK TO BE REMOVED.
11. EXISTING HANDICAPPED PARKING SIGN TO BE REMOVED.

NOTE:

1. ALL EXISTING SITE AND SURROUNDING FEATURES SUCH AS CURBING, UTILITIES, PAVEMENT, STRUCTURES, FENCES, LANDSCAPING, BOLLARDS, ETC. SHALL REMAIN AND BE PROTECTED THROUGHOUT CONSTRUCTION UNLESS NOTED OTHERWISE, OR ARE REQUIRED TO BE MODIFIED, RELOCATED OR REMOVED FOR THE INSTALLATION OF PROPOSED IMPROVEMENTS. ALL DISTURBED FEATURES SHALL BE RESTORED OR RELOCATED AS REQUIRED TO THE SATISFACTION OF THE FEATURE'S OWNER.

LEGEND

(SEE SHEET C-001 FOR GENERAL LEGEND)

- # — DEMOLITION KEYNOTE
- ##'LF± — DENOTES LIMITS OF SAWCUT
- EXISTING ASPHALT TO BE REMOVED FULL DEPTH
- EXISTING CONCRETE TO BE REMOVED

CONSTRUCTION KEYNOTES

1. PROPOSED FULL DEPTH ASPHALT PAVEMENT PER DETAIL ON SHEET C-501.
2. PROPOSED RESURFACED ASPHALT PAVEMENT PER DETAIL ON SHEET C-501.
3. PROPOSED CURB PER DETAIL ON SHEET C-501.
4. PROPOSED P.C.C. WHEELSTOP PER DETAIL ON SHEET C-501.
5. PROPOSED PAINTED 4" WIDE SOLID PARKING STRIPE - WHITE AT STANDARD ASPHALT PARKING STALL, YELLOW ON CONCRETE AND BLUE AT ADA PARKING STALL PER DETAIL ON SHEET C-501.
6. PROPOSED TRANSVERSE STRIPING PER DETAIL ON SHEET C-501.
7. PROPOSED DIRECTIONAL PAVEMENT MARKING PER DETAIL ON SHEET C-501.
8. PROPOSED PERMANENT SEEDING, SEE NOTES ON C-010.
9. PROPOSED ADA PAVEMENT SYMBOL PER DETAIL ON SHEET C-501.
10. EXISTING DRAINAGE PIPE TO REMAIN OPEN.
11. PROPOSED CONCRETE CURBED WALK PER DETAIL ON SHEET C-501.
12. PROPOSED BOLLARD PER DETAIL ON SHEET C-501.
13. PROPOSED ADA ACCESSIBLE RAMP PER DETAIL ON SHEET C-502.
14. PROPOSED VAN ACCESSIBLE HANDICAPPED PARKING SIGN SHALL BE MOUNTED ON THE BUILDING PER DETAIL ON SHEET C-502. CONTRACTOR SHALL INSTALL THE SIGN MEETING ALL ADA SPECIFICATIONS.
15. PROPOSED HANDICAPPED PARKING SIGN SHALL BE MOUNTED ON THE BUILDING PER DETAIL ON SHEET C-502. CONTRACTOR SHALL INSTALL THE SIGN MEETING ALL ADA SPECIFICATIONS.

NOTE: CONTRACTOR SHALL REPLACE EXISTING CLEANOUT CAP WITH A FLUSH TO GRADE THREAD-IN BRASS CLEANOUT CAP. ANY MATERIALS REQUIRED TO ACHIEVE INSTALLATION PER MANUFACTURERS RECOMMENDATIONS TO BE INCLUDED IN COST.

LEGEND

(SEE SHEET C-001 FOR GENERAL LEGEND)

- PROPOSED ASPHALT PER DETAIL SHEET C-501
- PROPOSED MILL AND RESURFACE
- PROPOSED CONCRETE WALK
- PROPOSED CURB
- # — CONSTRUCTION KEYNOTE

OHIO811.org Before You Dig

BENCHMARKS:

STATE PLANE GRID NORTH, NAD 83 (2011) OHIO SOUTH ZONE.
ELEVATIONS ARE NAVD 88, GEOID 18. TIED BY GPS TO THE O.D.O.T. VRS.

BENCHMARK #1 – N BOLT ON LIGHT POLE BASE
N= 300651, E= 2063167
**NOTE – LIGHTPOLE IS SOUTHEAST OF SURVEYED SITE.*
ELEVATION=569.68

BENCHMARK #2 – SPIKE FOUND IN POLE
N= 301014, E= 2063030
ELEVATION=565.56

GPD GROUP®
Glaus, Pyle, Schomer, Burns & DeHaven, Inc.
520 South Main Street, Suite 2531
Akron, OH 44311
330.572.2100 Fax 330.572.2101

CONTRACT DATE:	05.10.21
BUILDING TYPE:	TYPE M
PLAN VERSION:	-
BRAND DESIGNER:	-
SITE NUMBER:	4320
STORE NUMBER:	2021188.16

TACO BELL

63 OHIO RIVER PLAZA
GALLIPOLIS, OH 45631

REPAIR/ MAINTENANCE REMODEL

DEMO PLAN & SITE PLAN

C-101

COMPOST SOCK FABRIC MINIMUM SPECIFICATIONS

MATERIAL TYPE	3 mil HDPE	5 mil HDPE	5 mil HDPE	MULTI-FILAMENT POLYPROPYLENE (MFPP)	HEAVY DUTY MULTI-FILAMENT POLYPROPYLENE (MFPP)
MATERIAL CHARACTERISTICS	PHOTO-DEGRADABLE	PHOTO-DEGRADABLE	BIO-DEGRADABLE	PHOTO-DEGRADABLE	PHOTO-DEGRADABLE
SOCK DIAMETERS	12" 18"	12" 18" 24" 32"	12" 18" 24" 32"	12" 18" 24" 32"	12" 18" 24" 32"
MESH OPENING	3/8"	3/8"	3/8"	3/8"	1/8"
TENSILE STRENGTH		26 PSI	26 PSI	44 PSI	202 PSI
ULTRAVIOLET STABILITY % ORIGINAL STRENGTH (ASTM G-155)	% AT 1000 HR.	23% AT 1000 HR.		100% AT 1000 HR.	100% AT 1000 HR.
MINIMUM FUNCTIONAL LONGEVITY	6 MONTHS	9 MONTHS	6 MONTHS	1 YEAR	2 YEARS
TWO-PLY SYSTEMS					
INNER CONTAINMENT NETTING	HDPE BIAXIAL NET				
	CONTINUOUSLY WOUND				
	FUSION-WELDED JUNCTURES				
	3/4" X 3/4" MAX. APERTURE SIZE				
OUTER FILTRATION MESH	COMPOSITE POLYPROPYLENE FABRIC (WOVEN LAYER & NON-WOVEN FLEECE MECHANICALLY FUSED VIA NEEDLE PUNCH)				
	3/16" MAX. APERTURE SIZE				
SOCK FABRICS COMPOSED OF BURLAP MAY BE USED ON PROJECTS LASTING 6 MONTHS OR LESS					

COMPOST SHALL MEET THE FOLLOWING STANDARDS:

ORGANIC MATTER CONTENT	80% - 100% (DRY WEIGHT BASIS)
ORGANIC PORTION	FIBROUS AND ELONGATED
pH	5.5 - 8.0
MOISTURE CONTENT	35% - 55%
PARTICLE SIZE	98% PASS THROUGH 1" SCREEN
SOLUBLE SALT CONCENTRATION	5.0 dS MAXIMUM

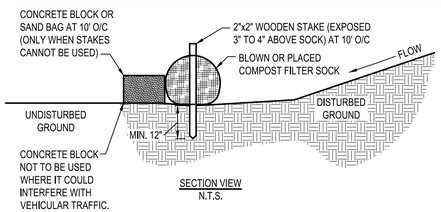

SECTION VIEW
N.T.S.

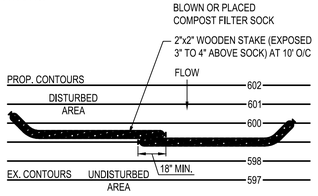

PLAN VIEW
N.T.S.

ADAPTED FROM FILTREXX

1. COMPOST FILTER SOCK SHALL BE PLACED AT EXISTING LEVEL GRADE. BOTH ENDS OF THE SOCK SHALL BE EXTENDED AT LEAST 8 FEET UP SLOPE AT 45 DEGREES TO THE MAIN SOCK ALIGNMENT.
2. TRAFFIC SHALL NOT BE PERMITTED TO CROSS FILTER SOCKS.
3. ACCUMULATED SEDIMENT SHALL BE REMOVED WHEN IT REACHES ½ THE ABOVE GROUND HEIGHT OF THE SOCK AND DISPOSED IN THE MANNER DESCRIBED ELSEWHERE IN THE PLAN.
4. SOCKS SHALL BE INSPECTED WEEKLY AND AFTER EACH ½ INCH STORM RUNOFF EVENT. DAMAGED SOCKS SHALL BE REPAIRED ACCORDING TO MANUFACTURER'S SPECIFICATIONS OR REPLACED WITHIN 24 HOURS OF INSPECTION.
5. BIODEGRADABLE FILTER SOCK SHALL BE REPLACED AFTER 6 MONTHS; PHOTODEGRADABLE SOCKS AFTER 1 YEAR. POLYPROPYLENE SOCKS SHALL BE REPLACED ACCORDING TO MANUFACTURER'S RECOMMENDATIONS.
6. UPON STABILIZATION OF THE AREA TRIBUTARY TO THE SOCK, STAKES SHALL BE REMOVED. THE SOCK MAY BE LEFT IN PLACE AND VEGETATED OR REMOVED. IN THE LATTER CASE, THE MESH SHALL BE CUT OPEN AND THE MULCH SPREAD AS A SOIL SUPPLEMENT.

A1 COMPOST FILTER SOCK
N.T.S.

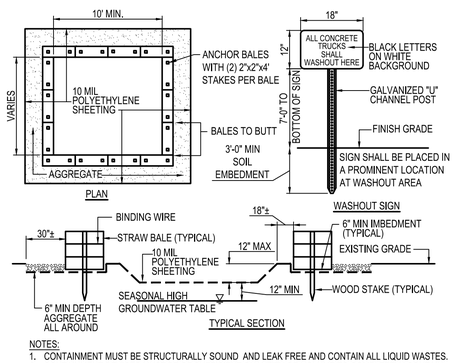

NOTES:
1. CONTAINMENT MUST BE STRUCTURALLY SOUND AND LEAK FREE AND CONTAIN ALL LIQUID WASTES.
2. CONTAINMENT DEVICES MUST BE OF SUFFICIENT QUANTITY OR VOLUME TO COMPLETELY CONTAIN THE LIQUID WASTES GENERATED.
3. WASHOUT MUST BE CLEANED OR NEW FACILITIES CONSTRUCTED AND READY TO USE ONCE WASHOUT IS 75% FULL.
4. WASHOUT AREA(S) SHALL BE INSTALLED IN A LOCATION EASILY ACCESSIBLE BY CONCRETE TRUCKS.
5. ONE OR MORE AREAS MAY BE INSTALLED ON THE CONSTRUCTION SITE AND MAY BE RELOCATED AS CONSTRUCTION PROGRESSES.
6. AT LEAST WEEKLY REMOVE ACCUMULATION OF SAND AND AGGREGATE AND DISPOSE OF PROPERLY.

B2 CONCRETE WASHOUT AREA
N.T.S.

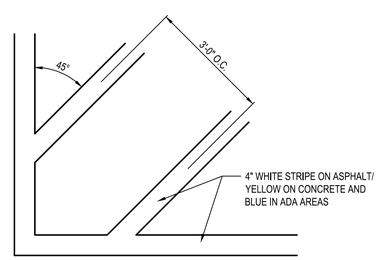

A2 TRANSVERSE STRIPING
N.T.S.

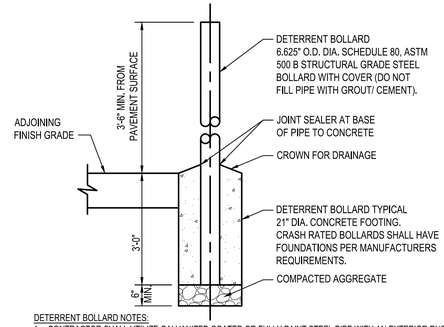

DETERRENT BOLLARD NOTES:
1. CONTRACTOR SHALL UTILIZE GALVANIZED COATED OR FULLY PAINT STEEL PIPE WITH AN EXTERIOR RUST INHIBITIVE PAINT PRIOR TO INSTALLATION AND TOUCH UP AFTER INSTALLATION SUCH AS SHERWIN-WILLIAMS MACROPOXY 646 FAST CURE (B58W610), IN ACCORDANCE WITH MANUFACTURERS PREPARATION REQUIREMENTS. PROVIDE A YELLOW (BLUE FOR ADA) BOLLARD COVER SUCH AS A STREET SMART SOLUTIONS POST GUARD, DOME-TOP COVER BY US-POSTMAN.COM OR APPROVED EQUAL.

CRASH-RATED BOLLARD NOTES
2. WHERE BOLLARDS ARE SEPARATING PEDESTRIANS / STOREFRONTS AND VEHICLES THE CONTRACTOR SHALL INSTALL A CRASH RATED BOLLARD AND FOOTING PER ASTM F3016/3016M. TYPICAL CLEAR SPACING OF 60" WITH AN ANTICIPATED S20 RATING FOR BIDDING PURPOSES - FINAL SPACING AND RATING SHALL BE IN ACCORDANCE WITH ASTM AND THE MANUFACTURERS REQUIREMENTS FOR PROPOSED LOCATIONS AND POSSIBLE VEHICLE APPROACH SPEED. THE NOTED ASTM CRASH RATED PRODUCT SUCH AS, BUT NOT LIMITED TO, CRASHCORE BOLLARD BY MCCUE.COM OR APPROVED CRASH RATED EQUIVALENT SHALL BE UTILIZED IN ACCORDANCE WITH MANUFACTURE SPECIFICATIONS. INSTALLER / CONTRACTOR SHALL BE OR BECOME CERTIFIED INSTALLERS, CONTACT MANUFACTURER(S) FOR DETAILS.

C3 BOLLARDS
N.T.S.

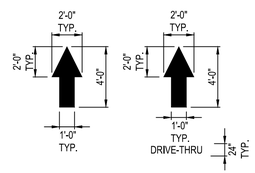

NOTES:

ALL PAVEMENT MARKINGS TO BE WHITE PAVEMENT PAINT, UNLESS STATED OTHERWISE. ALL PAVEMENT MARKINGS WITHIN ADA AREAS SHALL BE PAINTED BLUE EXCEPT FOR COLORS DEFINED ON THE ADA PAVEMENT SYMBOL.

MARKING (STRIPING) PAINT FOR PARKING SPACES, TRAFFIC ARROWS, ADA PARKING AND SYMBOLS, ETC., PER LOCAL REQUIREMENTS AND AS FOLLOWS:

PAVEMENT MARKINGS SHALL BE PER ODOT ITEM 642 TYPE 1.

PROVIDE A NON-SLIP AGGREGATE ADDITIVE TO MARKING PAINT USED AT ADA ACCESS RAMPS.

APPLY 2 COATS WITH STRAIGHT EDGES, YELLOW ON CONCRETE/WHITE ON ASPHALT EXCEPT WHEN MATCHING ADJACENT OR EXISTING COLOR WHEN THE PAVING IS AN EXPANSION OR SEGMENT OF A LARGER LOT. CONTRACTOR SHALL APPLY THE SECOND COAT NO SOONER THAN 30 DAYS OF APPLYING THE FIRST COAT.

B3 PAVEMENT MARKINGS & NOTES
N.T.S.

KEYED NOTES

1. PAINT BACKGROUND BENJAMIN MOORE M58 SAFETY & ZONE MARKING LATEX M58-30 - BLUE
2. PAINT SYMBOL BENJAMIN MOORE M58 SAFETY & ZONE MARKING LATEX M58-01 - WHITE 4" WIDTH
3. BOTTOM EDGE OF SYMBOL BOX SHALL MATCH END OF STALL STRIPE AT DRIVE AISLE END OF STALL.

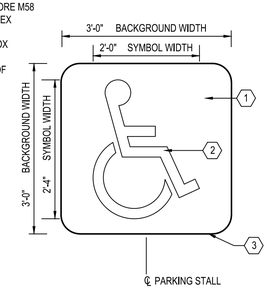

A3 ADA PAVEMENT SYMBOL
N.T.S.

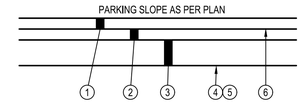

1. 1.5" ASPHALT SURFACE COURSE ODOT ITEM 441 TYPE I.
2. 3.5" ASPHALT BASE COURSE ODOT ITEM 441 TYPE II
3. 6" ODOT ITEM 304 CRUSHED LIMSTONE. (NO RECYCLED MATERIAL)
4. COMPACTED SUBGRADE ODOT ITEM 204
5. PROOF ROLLING
6. TACK COAT ODOT ITEM 407.

NOTES:

1. APPLY LIQUID ASPHALT AT ALL JOINTS BETWEEN CONCRETE AND ASPHALT AND WHERE PROPOSED ASPHALT MEETS EXISTING ASPHALT INCLUDING SAW CUT JOINTS.
2. NO RECYCLE MATERIAL SHALL BE PERMITTED IN ASPHALT SURFACE COURSE. SHALL BE 100% VIRGIN LIMESTONE MIX.
3. THIS DETAIL REPRESENTS THE MINIMUM ASPHALT PAVEMENT THICKNESS REQUIRED. CONTRACTOR SHALL MATCH EXISTING PAVEMENT IF THICKER.

C4 ASPHALT PAVEMENT SECTION
N.T.S.

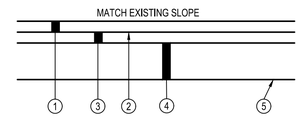

1. 1.5" ASPHALT SURFACE COURSE (ODOT ITEM 441 TYPE I)
2. TACK COAT AT 0.1 GAL/SY (ODOT ITEM 407)
3. SINGLE CHIP SEAL, TYPE B (ODOT ITEM 422)
4. EXISTING PAVEMENT BASE
5. PROOF ROLL (ODOT ITEM 204)

NOTES:

1. CONTRACTOR SHALL MILL DOWN EXISTING ASPHALT PAVEMENT 1-1/2" PER ODOT ITEM 254 BEFORE CONSTRUCTION OF RESURFACED TYPICAL SECTION.
2. PREPARED BASE SURFACE SHALL BE CLEAN AND FREE OF ANY LOOSE DEBRIS.
3. USE AIR COMPRESSOR (100 PSI MIN.) TO THOROUGHLY CLEAN ALL CRACKS PRIOR TO CHIP SEAL. PAVEMENT SHALL BE SWEPT AFTER CRACKS HAVE BEEN CLEAN OUT.
4. APPLY LIQUID ASPHALT AT ALL JOINTS BETWEEN CONCRETE AND ASPHALT AND WHERE PROPOSED ASPHALT MEETS EXISTING ASPHALT INCLUDING SAW CUT JOINTS PER ODOT 423 TYPE I.
5. CONTRACTOR SHALL MILL ALL PAVEMENT EDGES TO PROVIDE SMOOTH BUTT JOINT TRANSITIONS TO EXISTING PAVEMENT.
6. NO RECYCLE MATERIAL SHALL BE PERMITTED IN ASPHALT SURFACE COURSE. SHALL BE 100% VIRGIN LIMESTONE MIX.

B4 RESURFACED ASPHALT PAVEMENT SECTION
N.T.S.

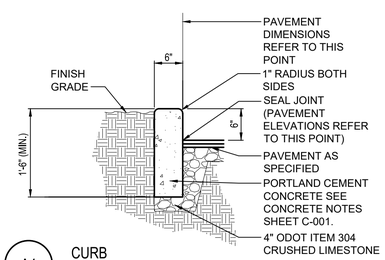

A4 CURB
N.T.S.

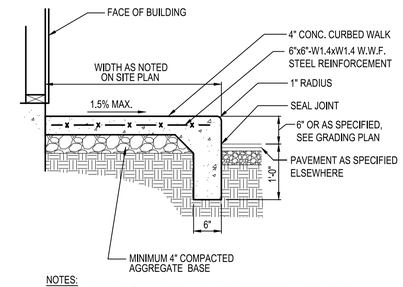

NOTES:
1. CONTRACTOR SHALL INSTALL 1/2" PRE-FORMED EXPANSION JOINT MATERIAL AND JOINT SEALER WHERE PAVEMENT ABUTS BUILDING.
2. FIBER MAY BE USED IN PLACE OF STEEL REINFORCEMENT, SEE CONCRETE NOTES SHEET C-001.

C5 CONCRETE CURBED WALK
N.T.S.

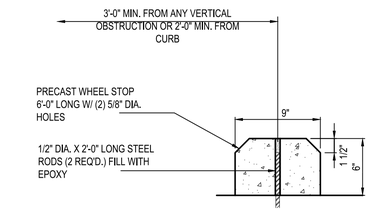

NOTES:
1. SEE SITE PLAN FOR LOCATION AND QUANTITY OF WHEELSTOPS.
2. WHEN NOTED AND ALLOWED BY THE OWNER , THE CONTRACTOR MAY RE-USE EXISTING WHEELSTOPS FOR THE PROPOSED SITE. CONTRACTOR AND CONSTRUCTION MANAGER SHALL COORDINATE WHICH EXISTING WHEELSTOPS MAY BE RE-USED PRIOR TO DEMOLITION. CONTRACTOR SHALL ENSURE THAT ALL RE-USED WHEELSTOPS ARE PROTECTED DURING CONSTRUCTION.

B5 P.C.C. WHEELSTOP
N.T.S.

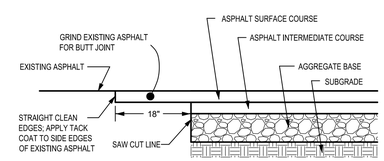

A5 BUTT JOINT
N.T.S.

GPD GROUP®
Glaus, Pyle, Schomer, Burns & DeHaven, Inc.
520 South Main Street, Suite 2531
Akron, OH 44311
330.572.2100 Fax 330.572.2101

CONTRACT DATE:	05.10.21
BUILDING TYPE:	TYPE M
PLAN VERSION:	-
BRAND DESIGNER:	-
SITE NUMBER:	4320
STORE NUMBER:	2021188.16

TACO BELL

63 OHIO RIVER PLAZA
GALLIPOLIS, OH 45631

REPAIR/ MAINTENANCE REMODEL
SITE DETAILS

C-501

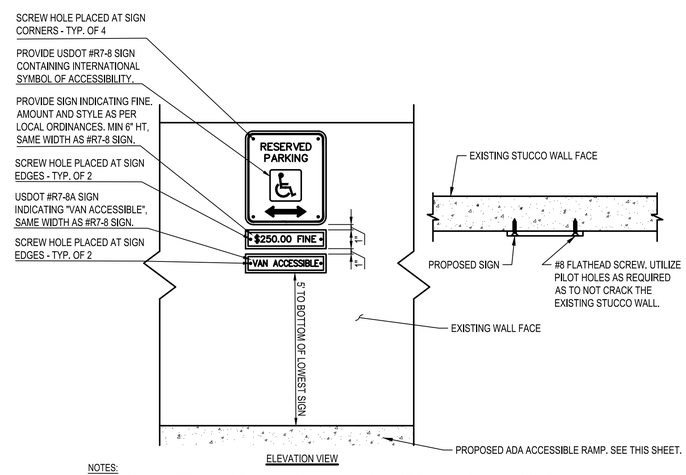

ELEVATION VIEW

NOTES:

1. THE CONTRACTOR SHALL BE RESPONSIBLE FOR THE MEANS AND METHODS OF SECURING THE NEW SIGNS TO THE EXISTING BUILDING. IF ANY BUILDING FINISHES ARE DAMAGED DUE TO THE INSTALLATION MEANS OF THE CONTRACTOR, THE COST TO REPAIR THE WALL SHALL BE AT THE SOLE EXPENSE OF THE CONTRACTOR PERFORMING THE WORK, AND NOT AN ADDED COST TO THE PROJECT. DAMAGES TO THE EXISTING WALL AND MATERIALS SHALL BE REPAINTED TO THE SATISFACTION OF THE OWNER OR OWNER'S REPRESENTATIVE.
2. CONTRACTOR SHALL VERIFY SIGN WITH LOCAL AND ADA REQUIREMENTS AND SPECIFICATIONS BEFORE INSTALLATION. LOCAL JURISDICTION SIGN REQUIREMENTS SHALL TAKE PRECEDENCE OVER THIS DETAIL.
3. SIGN TO BE PROVIDED AT ALL ADA ACCESSIBLE PARKING SPACES AS PER ADA REGULATIONS. VAN ACCESSIBLE SIGN TO ONLY BE PROVIDED AT VAN ACCESSIBLE SPACE, SHEET SHEET C-101.

A4 HANDICAPPED PARKING SIGN

N.T.S.

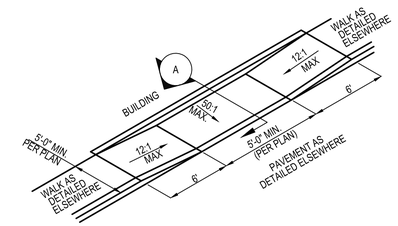

PARALLEL RAMP

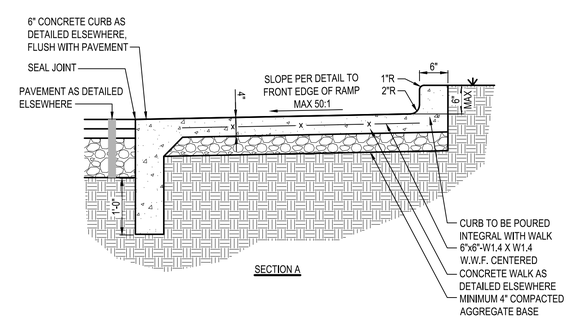

SECTION A

NOTES:

1. CONTRACTOR SHALL INSTALL 1/2" PRE-FORMED EXPANSION JOINT MATERIAL AND JOINT SEALER WHERE PAVEMENT ABUTS BUILDING.

A5 ADA ACCESSIBLE RAMP

N.T.S.

GPD GROUP®
Glaus, Pyle, Schomer, Burns & DeHaven, Inc.
520 South Main Street, Suite 2531
Akron, OH 44311
330.572.2100 Fax 330.572.2101

CONTRACT DATE:	05.10.21
BUILDING TYPE:	TYPE M
PLAN VERSION:	-
BRAND DESIGNER:	-
SITE NUMBER:	4320
STORE NUMBER:	2021188.16

TACO BELL

63 OHIO RIVER PLAZA
GALLIPOLIS, OH 45631

REPAIR/ MAINTENANCE REMODEL

SITE DETAILS

C-502

LANDSCAPE NOTES & PLANTING SPECIFICATIONS

SCOPE OF WORK

1. THIS WORK SHALL CONSIST OF PERFORMING CLEARING AND GRUBBING, SOIL PREPARATION, FINISH GRADING, PLANTING AND DRAINAGE, INCLUDING ALL LABOR, MATERIALS, TOOLS, EQUIPMENT, AND ANY OTHER APPURTENANCES NECESSARY FOR THE COMPLETION OF THIS PROJECT.
2. QUANTITY TAKEOFF IS SUPPLIED FOR CONTRACTOR'S ASSISTANCE ONLY. CONTRACTOR IS RESPONSIBLE FOR SUPPLYING ALL PLANT MATERIALS AS PER PLAN.
3. NO ADDITIONAL COMPENSATION SHALL BE PAID TO THE CONTRACTOR FOR DAMAGE AND REPAIR WITHIN EASEMENT OR RIGHT-OF-WAY LIMITS.

PRESERVATION/PROTECTION (IF APPLICABLE)

1. CONTRACTOR SHALL MAINTAIN AND PRESERVE TREES AND SHRUBS NOT BEING REMOVED, INCLUDING THEIR ROOTS. TREE PROTECTION FENCING SHALL BE USED AT THE DRIP LINE OF ALL TREES AND SHRUBS WITHIN 50 FEET OF CONSTRUCTION EXCEPT AS SHOWN ON PLAN. FENCING SHALL REMAIN IN PLACE UNTIL FINAL PLANT INSPECTION FOLLOWING CONSTRUCTION. MATERIALS SHALL NOT BE STOCKPILED WITHIN THIS DEFINED AREA AND VEHICLES AND OTHER EQUIPMENT SHALL BE OPERATED TO AVOID SOIL COMPACTION.
2. FEEDER ROOTS SHOULD NOT BE CUT IN AN AREA EQUAL TO TWICE THE TREE CIRCUMFERENCE (MEASURED 6" ABOVE THE GROUND LINE IN INCHES) EXPRESSED IN FEET. (EXAMPLE: A CIRCUMFERENCE OF 10" WOULD HAVE A 'NO CUT' ZONE OF 20 FEET IN ALL DIRECTIONS FROM THE TREE). THIS SHOULD APPLY TO UTILITY SERVICES, IF FEASIBLE. THE ONLY EXCEPTION TO THIS REQUIREMENT WILL BE THOSE SPECIFICALLY ALLOWED BY THE LANDSCAPE ARCHITECT, SPECIFICATIONS OR AS INDICATION ON THE PLANS.
3. TREE TRUNKS AND EXPOSED ROOTS DAMAGED DURING EQUIPMENT OPERATIONS SHALL BE TREATED IN ACCORDANCE WITH THE ARBOR CULTURAL STANDARDS OF THE CITY.

PLANT MATERIALS

1. GENERAL - ALL MATERIALS SHALL BE OF ITS KIND AVAILABLE AND SHALL HAVE BEEN GROWN IN A CLIMATE SIMILAR TO THAT ON SITE.
2. PLANTS - ALL PLANTS SHALL BE HEALTHY, OF NORMAL GROWTH, WELL ROOTED, FREE FROM DISEASE AND INSECTS. QUALITY AND SIZE OF PLANT MATERIAL SHALL CONFORM TO ANSI Z60.1 "AMERICAN STANDARDS FOR NURSERY STOCK".
3. VARIETIES AND SIZES OF PLANTS SHALL BE AS SHOWN ON DRAWINGS.
4. PLANTS SHALL BE IN A HEALTHY, VIGOROUS CONDITION. FREE OF DEAD OR BROKEN BRANCHES, SCARS THAT ARE NOT COMPLETELY HEALED, FROST CRACKS, DISFIGURING KNOTS, BROKEN OR ABRADED BARK, REDUNDANT LEADERS OR BRANCHES, OR ABERRATIONS OF ANY KIND. PLANTS SHALL NOT HAVE MULTIPLE LEADERS, UNLESS THIS IS THE NATURAL FORM.
5. BALLED AND BURLAPPED (B&B) PLANTS SHALL BE DUG WITH A FIRM ROOT BALL OF NATURAL EARTH, OF A SIZE IN PROPORTION TO THE PLANT'S SIZE, AS MEASURED BY CALIPER, HEIGHT, OR SPREAD. BALLED AND BURLAPPED PLANTS SHALL BE HANDLED ONLY BY THE ROOT BALL, NOT BY THE TRUNK OR BRANCHES, AS THIS MAY BREAK OR LOOSEN THE ROOT BALL AND DAMAGE THE ROOT SYSTEM. CONTAINER PLANTS SHALL HAVE BEEN ESTABLISHED FOR A MINIMUM OF ONE FULL GROWING SEASON IN THEIR CONTAINERS BEFORE INSTALLATION. CONTAINER PLANTS SHALL BE HANDLED ONLY BY THE CONTAINER, NOT BY THE STEMS OR BRANCHES, AS THIS MAY PULL THE PLANT OUT OF THE CONTAINER AND BREAK OR LOOSEN THE ROOT BALL AND DAMAGE THE ROOT SYSTEM.
6. PLANTS SHALL BE PROTECTED FROM DRYING OUT DURING SHIPPING WITH TARPAULINS OR OTHER COVERINGS. PLANTS SHALL BE PROTECTED FROM DRYING OUT AFTER DELIVERY BY PLANTING IMMEDIATELY; IF THIS IS NOT POSSIBLE, THE ROOT BALL SHALL BE COVERED WITH PEAT MOSS OR EARTH, AND WATERED FREQUENTLY TO KEEP IT MOIST UNTIL PLANTING.
7. DO NOT HANDLE, MOVE, BIND, TIE OR OTHERWISE TREAT PLANTS SO AS TO DAMAGE THE ROOT BALL, ROOTS, TRUNK, OR BRANCHES IN ANY WAY.

TOPSOIL

1. TOPSOIL HAS BEEN (OR WILL BE) STOCKPILED FOR REUSE IN LANDSCAPE WORK. IF QUANTITY OF STOCKPILED TOPSOIL IS INSUFFICIENT, PROVIDE ADDITIONAL TOPSOIL AS REQUIRED TO COMPLETE LANDSCAPE WORK. IMPORTED TOPSOIL SHALL CONSIST OF LOOSE, FRIABLE, LOAMY TOPSOIL WITHOUT ADMIXTURE OF SUBSOIL OR REFUSE. ACCEPTABLE TOPSOIL SHALL CONTAIN NOT LESS THAN 3 PERCENT NOR MORE THAN 20 PERCENT ORGANIC MATTER.
2. PLANTING BACKFILL FOR PARKING LOT ISLANDS SHALL CONSIST OF A HOMOGENEOUS MIXTURE OF 3 PARTS TOPSOIL TO ONE PART SPHAGNUM PEAT INSTALLED OVER A 6" THICKNESS OF NO. 57 AGGREGATE.

SOIL CONDITIONING

1. OBTAIN LABORATORY ANALYSIS OF STOCKPILED AND IMPORTED TOPSOIL COMPLETE WITH RECOMMENDATIONS FOR SOIL AMENDMENT.
2. BEFORE MIXING, CLEAN TOPSOIL OF ROOTS, PLANTS, SOD, STONES, CLAY LUMPS, AND OTHER EXTRANEOUS MATERIALS HARMFUL OR TOXIC TO PLANT GROWTH.
3. MIX SPECIFIED SOIL AMENDMENTS AND FERTILIZERS WITH TOPSOIL AT RATES SPECIFIED BY THE LAB REPORT. DELAY MIXING OF FERTILIZER IF PLANTING WILL NOT FOLLOW PLACING OF PLANTING SOIL WITHIN A FEW DAYS.
4. FOR PLANTING BEDS AND LAWNS, MIX PLANTING SOIL EITHER PRIOR TO PLANTING OR APPLY ON SURFACE OF TOPSOIL AND MIX THOROUGHLY BEFORE PLANTING. MIX LIME WITH DRY SOIL PRIOR TO MIXING OF FERTILIZER.
5. PREVENT LIME FROM CONTACTING ROOTS OF ACID-LOVING PLANTS.
6. APPLY PHOSPHORIC ACID FERTILIZER (OTHER THAN THAT CONSTITUTING A PORTION OF COMPLETE FERTILIZERS) DIRECTLY TO SUBGRADE BEFORE APPLYING PLANTING SOIL AND TILLING.

PLANTING SOIL

1. PLANTING SOIL MIX SHALL BE CLEAR OF ALL STONES AND DEBRIS 1" OR LARGER, AND CONSIST OF THE FOLLOWING: 25% ORGANIC COMPOST, 75% ACCEPTABLE TOPSOIL.

OTHER MATERIALS

1. BED EDGING - EDGING SHALL BE 4" STEEL EDGING WITH THREE (3) METAL ANCHOR STAKES PER 20 FOOT SECTION. ALL MASS PLANTING BEDS SHALL HAVE EDGING PLACED BETWEEN MULCH AREA AND ANY ADJACENT TURF AREA.
2. MULCH: ORGANIC MULCH FREE FROM DELETERIOUS MATERIALS AND SUITABLE FOR TOP DRESSING OF TREES, SHRUBS, OR PLANTS AND CONSISTING OF THE FOLLOWING:
   b. NON-DRYED, DOUBLE SHREDDED HARDWOOD SHALL BE INSTALLED IN LANDSCAPE BEDS AT A DEPTH OF 3 INCHES. COLOR SHALL MATCH EXISTING.
3. WEED BARRIER - POLYETHYLENE FILTER FABRIC DESIGNED TO PERMIT WATER INFILTRATION WHILE PREVENTING WEED GROWTH-TO BE INSTALLED IN ALL PLANTING BEDS.

WEEDING

1. BEFORE AND DURING PRELIMINARY GRADING AND FINISH GRADING, ALL WEEDS AND GRASSES SHALL BE DUG OUT BY THE ROOTS AND DISPOSED OF AT THE CONTRACTOR'S EXPENSE.

GUARANTEE

1. CONTRACTOR SHALL GUARANTEE ALL PLANTS FOR A PERIOD OF ONE (1) YEAR FROM DATE OF PROJECT ACCEPTANCE BY THE OWNER.

GENERAL WORK PROCEDURES

1. LANDSCAPE WORK SHALL BE ACCORDING TO THE WORKMANLIKE STANDARDS ESTABLISHED FOR LANDSCAPE CONSTRUCTION AND PLANTING IN THE OHIO STANDARDIZED LANDSCAPE SPECIFICATIONS (ASLA) AND ANY LOCAL LANDSCAPE ORDINANCES.
2. CONTRACTOR SHALL OBTAIN A COPY OF LOCAL ORDINANCES REGARDING ACCEPTABLE PLANT AND PLANTING DETAILS AND ABIDE BY THOSE ORDINANCES AND DETAILS.
3. ENGINEER RESERVES THE RIGHT TO REJECT ALL PLANT MATERIAL DEEMED NOT ACCEPTABLE.
4. ANY PROPOSED PLANT SUBSTITUTIONS SHALL BE EQUIVALENT IN FORM, HABIT, STRUCTURE, BRANCHING AND LEAF TYPE AND MUST BE ISSUED TO THE LANDSCAPE ARCHITECT FOR APPROVAL, IN WRITING, PRIOR TO INSTALLATION.

PLANTING

1. POSITION TREES AND SHRUBS AT THEIR INTENDED LOCATIONS AS PER THE PLANS AND SECURE THE APPROVAL OF THE OWNER BEFORE EXCAVATING PITS, MAKING NECESSARY ADJUSTMENTS AS DIRECTED.
2. PLANTING PITS SHALL BE AS PER DETAILS.
3. PREPARED SOIL SHALL BE TAMPED FIRMLY AT BOTTOM OF PIT. FILL PREPARED SOIL AROUND BALL OF PLANT. COMPLETE BACKFILLING AND WATER THOROUGHLY.
4. PREPARE RAISED EARTH BASIN AS WIDE AS PLANTING HOLE OF EACH PLANT.
5. WATER IMMEDIATELY AFTER PLANTING. WATER SHALL BE APPLIED TO EACH TREE AND SHRUB IN SUCH MANNER AS NOT TO DISTURB BACKFILL AND TO THE EXTENT THAT ALL MATERIALS IN THE PLANTING HOLE ARE THOROUGHLY SATURATED.
6. INSTALL BED EDGING AND MULCH.
7. REMOVE ALL SALES TAGS, STRINGS, STRAPS, WIRE, ROPE OR OTHER MATERIALS THAT MAY INHIBIT PLANT GROWTH BOTH ABOVE AND BELOW THE SURFACE OF THE SOIL.
8. REMOVE ANY BROKEN, SUCKERING, DISEASED, CRISSCROSSED OR AESTHETICALLY DISPLEASING BRANCHES BACK TO LIVE LEADER OR SIDE LATERAL WITH A FLUSH CUT.
9. MULCH TREES AND SHRUBS AND OTHER AREAS NOTED ON THE PLANTING PLAN WITH A 3" LAYER OF MULCH AS SPECIFIED IN NOTE 2 OF "OTHER MATERIALS".

FINISH GRADING

1. ALL AREAS WILL BE GRADED BY THE CONTRACTOR TO SUBSTANTIALLY PLUS/MINUS 0.1 FOOT OF FINISH GRADE.
2. ALL LAWN AND PLANTING AREAS SHALL BE GRADED TO A SMOOTH, EVEN, UNIFORM PLANE WITH NO ABRUPT CHANGE OF SURFACE. SOIL AREAS ADJACENT TO THE BUILDINGS SHALL SLOPE AWAY FROM THE BUILDINGS.
3. ALL PLANTING AREAS SHALL BE GRADED AND MAINTAINED TO ALLOW FREE FLOW OF SURFACE WATER.
4. PARKING LOT ISLAND SHALL BE BACKFILLED AS PART OF THIS CONTRACT.

CLEANUP

1. UPON THE COMPLETION OF ALL PLANTING WORK AND BEFORE FINAL ACCEPTANCE, THE CONTRACTOR SHALL REMOVE ALL MATERIAL, EQUIPMENT, AND DEBRIS RESULTING FROM HIS WORK. AN 'ACCEPTABLE CONDITION' SHALL BE AS DEFINED AND APPROVED BY THE OWNER'S AUTHORIZED REPRESENTATIVE.

SEEDING

1. GRASS SEED SHALL BE FRESH, CLEAN, DRY, NEW-CROP SEED COMPLYING WITH THE ASSOCIATION OF OFFICIAL SEED ANALYSTS' "RULES FOR TESTING SEEDS" FOR PURITY AND GERMINATION TOLERANCES.
2. ALL AREAS TO BE SEEDED SHALL RECEIVE NO LESS THAN FIVE POUNDS OF SEED PER ONE THOUSAND SQUARE FEET. APPLY SEED AND PROTECT WITH STRAW MULCH AS REQUIRED FOR NEW LAWNS. GRASS SEED MIX SHALL CONSIST OF THE FOLLOWING:

PROPORTION	NAME	MIN.% GERM.	MIN.% PURE SEED	MAX.% WEED SEED
30%	KENTUCKY BLUEGRASS (POA PRATENSIS)	80	85	0.50
30%	CREEPING RED FESCUE (FESTUCA RUBRA)	85	98	0.50
20%	PERENNIAL RYE GRASS (LOLIUM PERENNE)	90	98	0.50
20%	ANNUAL RYEGRASS (LOLIUM MULTIFLORUM)	85	92	1.00

MAINTENANCE

(MAINTENANCE PERIOD TO COMMENCE AFTER FINAL INSPECTION.)

1. MAINTENANCE PERIOD FOR THIS CONTRACT SHALL BE 90 CALENDAR DAYS COMMENCING AFTER FINAL INSPECTION OF CONSTRUCTION.
2. MAINTAIN TREES, SHRUBS AND OTHER PLANTS BY PRUNING, CULTIVATING AND WEEDING AS REQUIRED FOR HEALTHY GROWTH. RESTORE PLANTING SAUCERS. RESET TREES AND SHRUBS TO PROPER GRADES OR VERTICAL POSITION AS REQUIRED.
3. MAINTAIN LAWNS BY WATERING, MOWING, TRIMMING, AND OTHER OPERATIONS SUCH AS ROLLING, REGRADING AND REPLANTING AS REQUIRED TO ESTABLISH A SMOOTH, ACCEPTABLE LAWN, FREE OF ERODED OR BARE AREAS.
4. MAINTAIN THE LANDSCAPING BY KEEPING ALL PLANTS DISEASE-FREE AND PLANTING BEDS GROOMED, EXCEPT IN NATURALLY OCCURRING VEGETATION AREAS.
5. REPLACE ANY REQUIRED PLANTING(S), WHICH SEVERELY DECLINE OR DIE AFTER THE DATE OF PLANTING. SUCH REPLACEMENT SHALL OCCUR DURING THE NEXT APPROPRIATE PLANTING SEASON.

PLANTING SCHEDULE

1. ALL PLANTING IS RECOMMENDED TO BE DONE WITHIN THE FOLLOWING DATES. WHEN PLANTING OUTSIDE THESE DATES, WRITTEN DOCUMENTATION SHALL BE PROVIDED THAT SURVIVAL OR REPLACEMENT WILL BE ENSURED. NO PLANTING SHALL BE DONE IN FROZEN SOIL.

NORMAL PLANTING SEASONS	SPRING	FALL
ALL TREES AND SHRUBS	MARCH 15-MAY 15	OCTOBER 1-DECEMBER 1
EVERGREENS	APRIL 1-MAY 15	OCTOBER 1-NOVEMBER 15
GROUNDCOVERS	APRIL 1-JUNE1	WHEN SOD IS WORKABLE
SEED AND MULCH	APRIL 1-MAY 15	OCTOBER 1-NOVEMBER 15

GENERAL NOTE

1. ALL AREAS DISTURBED BY CONSTRUCTION THAT ARE WITHIN THE RIGHT-OF-WAY SHALL BE FINE GRADED TO MAINTAIN POSITIVE DRAINAGE. HAVE A 4" LAYER OF TOPSOIL APPLIED AND BE SEEDED ACCORDING TO SPECIFICATIONS ON THIS SHEET.

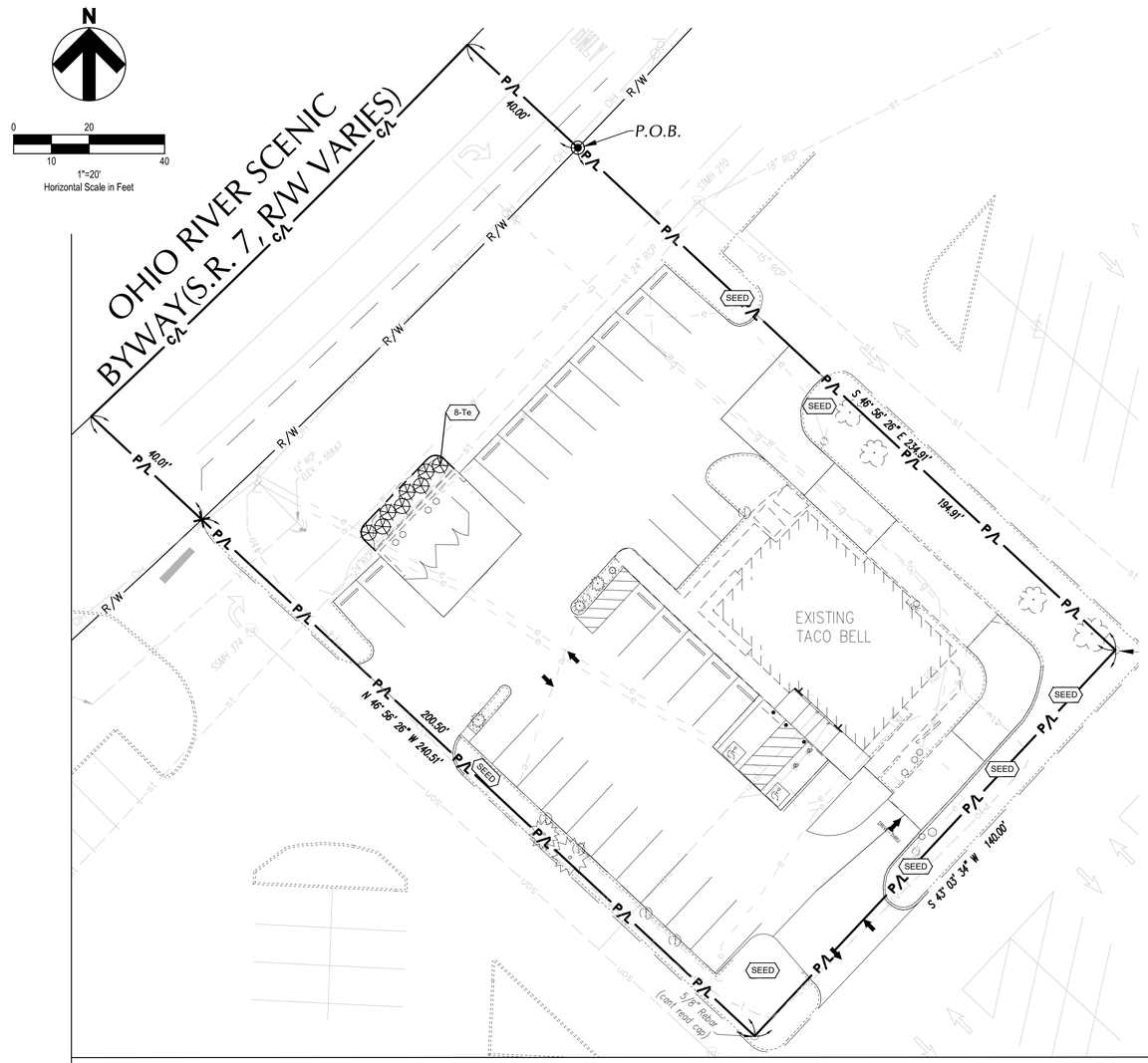

2 LANDSCAPE PLAN
1" = 20'

PLANT LIST

Symbol	Botanical Name	Common Name	Qty.	Min. Size	Condition	Remarks
Te	Thuja occidentalis 'Smaragd'	Emerald Arborvitae	8	6' H	B&B	4' o/c

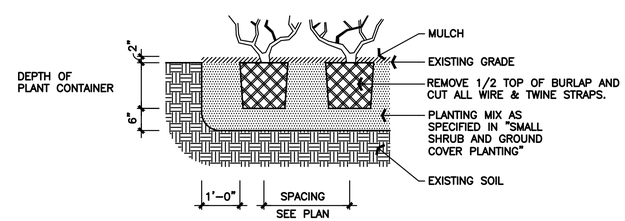

SHRUB PLANTING – SECTION
1/2" = 1'-0"
0 2'

LEGEND

(SEE SHEET C-001 FOR GENERAL LEGEND)

- EXISTING TREE
- EXISTING SHRUB
- PROPOSED LANDSCAPE BED EDGE
- PROPOSED SHRUB / PERENNIAL
- ##-Xx — PROPOSED PLANT QUANTITY AND SYMBOL
- SEED — PROPOSED LAWN AREA

LANDSCAPE NOTES

1. MULCH PER LANDSCAPE SPECIFICATIONS.
2. ALL DISTURBED AREAS NOT TO BE PAVED OR MULCHED SHALL BE SEEDED PER SPECIFICATIONS.

GPD GROUP®
Glaus, Pyle, Schomer, Burns & DeHaven, Inc.
520 South Main Street, Suite 2531
Akron, OH 44311
330.572.2100 Fax 330.572.2101

△ ADDENDUM #1	09.01.22
△	
△	
△	
△	

CONTRACT DATE:	05.10.21
BUILDING TYPE:	TYPE M
PLAN VERSION:	-
BRAND DESIGNER:	-
SITE NUMBER:	4320
STORE NUMBER:	2021188.16

TACO BELL

63 OHIO RIVER PLAZA
GALLIPOLIS, OH 45631

REPAIR/ MAINTENANCE REMODEL

△ LANDSCAPE PLAN

L-101

ASDASD

GENERAL PROVISIONS:

TYPICAL DETAILS AND GENERAL NOTES APPLY TO ALL PARTS OF THE WORK EXCEPT WHERE SPECIFICALLY DETAILED OR UNLESS OTHERWISE NOTED.

DRAWINGS ARE NOT TO BE SCALED.

FOR DIMENSIONS NOT SHOWN, COORDINATE WITH ARCHITECTURAL DRAWINGS.

THE CONTRACTOR SHALL CAREFULLY REVIEW THE DRAWINGS TO IDENTIFY THE SCOPE OF WORK REQUIRED, VISIT THE SITE TO RELATE THE SCOPE OF WORK TO EXISTING CONDITIONS, AND DETERMINE THE EXTENT OF WHICH THOSE CONDITIONS AND PHYSICAL SURROUNDINGS WILL IMPACT THE WORK.

EXISTING CONDITIONS AS SHOWN ON THESE PLANS ARE FOR REFERENCE ONLY. THE CONTRACTOR IS REQUIRED TO FIELD VERIFY ALL EXISTING CONDITIONS PRIOR TO CONSTRUCTION.

THE CONTRACTOR SHALL ASSUME THE MOST STRINGENT REQUIREMENTS APPLY IN CASE OF CONFLICT AMONG SPECIFICATIONS, STANDARDS, CODES AND DRAWINGS. THE CONTRACTOR SHALL NOTIFY THE ARCHITECT/ENGINEER IMMEDIATELY TO RESOLVE THE CONFLICT.

ANY DEVIATION, MODIFICATION, OR SUBSTITUTION FROM THE BID SET OF STRUCTURAL DRAWINGS SHALL BE SUBMITTED TO THE ARCHITECT AND ENGINEER FOR REVIEW/APPROVAL PRIOR TO ITS USE OR INCLUSION ON THE SHOP DRAWINGS. WITHOUT SUCH PRIOR APPROVAL, DEVIATIONS, MODIFICATIONS, OR SUBSTITUTIONS WILL BE REJECTED. COSTS FOR DEMOLITION AND REWORK OF SUCH ITEMS WILL BE BORNE BY THE CONTRACTOR.

THE STRUCTURE IS DESIGNED TO BE SELF-SUPPORTING AND STABLE AFTER THE BUILDING IS FULLY COMPLETED FOR IN-SERVICE LOADS ONLY. THE MEANS, METHODS, PROCEDURES, AND SEQUENCES OF CONSTRUCTION ARE THE SOLE RESPONSIBILITY OF THE CONTRACTOR. THE CONTRACTOR SHALL PROVIDE AND MAINTAIN ALL NECESSARY TEMPORARY SYSTEMS (SHORING, BRACING, GUYS, FALSEWORK, FORMWORK, SHEETING ETC.) TO ENSURE THE INTEGRITY OF THE STRUCTURE AT ALL STAGES OF CONSTRUCTION. ALL WORK SHALL BE PERFORMED WITHOUT DAMAGE TO ADJACENT EXISTING WORK. SHORING SYSTEMS SHALL BE DESIGNED, SIGNED, AND SEALED BY A PROFESSIONAL ENGINEER LICENSED IN THE JURISDICTION WHERE THE PROJECT IS LOCATED.

THE CONTRACTOR IS RESPONSIBLE FOR SITE SAFETY. THE CONTRACTOR AND ALL SUBCONTRACTORS SHALL REVIEW THE STRUCTURAL CONTRACT DOCUMENTS AND SHALL NOTIFY THE STRUCTURAL ENGINEER OF ANY CONFLICTS BETWEEN THOSE DOCUMENTS AND ANY SAFETY REGULATIONS. SUCH REVIEW AND NOTIFICATION SHALL OCCUR PRIOR TO PRODUCTION OF SHOP DRAWINGS.

THE CONTRACTOR SHALL PROTECT ALL WORK, MATERIALS, AND EQUIPMENT FROM DAMAGE AND SHALL PROVIDE PROPER STORAGE FACILITIES FOR MATERIALS AND EQUIPMENT DURING CONSTRUCTION.

SITE VISITS PERFORMED BY THE ARCHITECT/ENGINEER DO NOT INCLUDE INSPECTIONS OF MEANS AND METHODS OF CONSTRUCTION PERFORMED BY THE CONTRACTOR.

STRUCTURAL OBSERVATIONS PERFORMED BY THE ARCHITECT/ENGINEER DURING CONSTRUCTION ARE NOT THE CONTINUOUS AND SPECIAL INSPECTION SERVICES AND DO NOT WAIVE THE RESPONSIBILITY FOR THE INSPECTIONS REQUIRED OF THE BUILDING DEPARTMENT INSPECTOR OR THE TESTING AGENCY. ALSO, OBSERVATIONS DO NOT GUARANTEE THE CONTRACTOR'S PERFORMANCE AND SHALL NOT BE CONSIDERED AS SUPERVISION OF CONSTRUCTION.

ROOF DECK HAS BEEN DESIGNED ONLY FOR THE DESIGN LOADING CRITERIA AS INDICATED IN THE CONSTRUCTION DOCUMENTS. THE WEIGHT OF CONSTRUCTION MATERIALS AND EQUIPMENT ON THE STRUCTURE SHALL BE LIMITED TO THE DESIGN LOADING CRITERIA UNLESS APPROVED BY THE ENGINEER OF RECORD. ANY EQUIPMENT OR MATERIALS THAT EXCEED THE DESIGN LOADING WILL NOT BE PERMITTED WITHOUT AN ANALYSIS OF THE STRUCTURE BY A PROFESSIONAL ENGINEER LICENSED IN THE STATE OF THE PROJECT. SUBMIT STAMPED CALCULATIONS TO ENGINEER FOR REVIEW. THE RESPONSIBILITY FOR THE ANALYSIS OF ANY ELEVATED SLABS IS THE SOLE RESPONSIBILITY OF THE CONTRACTOR.

DESIGN LOADINGS:

GOVERNING BUILDING CODE: 2017 OHIO BUILDING CODE

GRAVITY LOADS:

FLOOR DEAD LOADS	ACTUAL MAT'L WEIGHTS
FLOOR LIVE LOADS	
RETAIL FIRST FLOOR	100 PSF
ROOF DEAD LOAD	ACTUAL MAT'L WEIGHTS
ROOF LIVE LOAD	20 PSF
ROOF SNOW LOADS:	
GROUND SNOW LOAD (Pg)	20 PSF
EXPOSURE FACTOR (Ce)	1.0
IMPORTANCE FACTOR (I)	1.0
THERMAL FACTOR (Ct)	1.0
FLAT-ROOF SNOW LOAD (Pf):	14 PSF

LATERAL LOAD DESIGN DATA:

WIND DESIGN DATA (ASCE 7-10):

BASIC WIND SPEED (ULTIMATE)	106 MPH
RISK CATEGORY	II
EXPOSURE CATEGORY	
NORTH/SOUTH	C
EAST/WEST	C

SEISMIC DESIGN DATA (ASCE 7-10):

SEISMIC IMPORTANCE FACTOR (I)	1.00
RISK CATEGORY	II
MAPPED SPECTRAL RESPONSE	
SHORT PERIODS (Ss)	0.132
1 SEC. PERIODS (S1)	0.067
SPECTRAL RESPONSE COEFF.	
SHORT PERIODS (SDS)	0.141
1 SEC. PERIODS (SD1)	0.107
SEISMIC DESIGN CATEGORY	B
SITE CLASS	D (ASSUMED)

SEISMIC ANALYSIS NOT REQUIRED PER EXCEPTION 807.5 OF THE 2015 EXISTING BUILDING CODE.

CONCRETE:

ALL CONCRETE CONSTRUCTION SHALL CONFORM TO ACI 301-10, "STANDARD SPECIFICATION FOR STRUCTURAL CONCRETE" AND ACI 302, 305 AND 306 UNLESS NOTED OTHERWISE.

ALL DETAILING, FABRICATION AND PLACING OF CONCRETE SHALL CONFORM TO ACI 318-14, "BUILDING CODE REQUIREMENTS FOR STRUCTURAL CONCRETE" AND THE ACI "MANUAL OF STANDARD PRACTICE FOR DETAIL REINFORCED CONCRETE STRUCTURES" UNLESS NOTED OTHERWISE.

SAFETY AND PERFORMANCE OF THE STRUCTURE ARE THE RESPONSIBILITY OF THE CONTRACTOR INSOFAR AS THEY ARE AFFECTED BY THE LOCATION AND DETAILS OF CONSTRUCTION JOINTS. SHOP DRAWINGS OF THE PROPOSED CONSTRUCTION JOINT LOCATIONS AND DETAILS ARE TO BE SUBMITTED TO THE ARCHITECT FOR APPROVAL.

CONCRETE SHALL BE HARD ROCK CONC. (5 SACK CEMENT PER CU.YD. MIN.)

CEMENT SHALL BE IN ACCORDANCE WITH ASTM C 150 TYPE II.

ALL CONCRETE SHALL DEVELOP A MINIMUM COMPRESSIVE STRENGTH IN 28 DAYS AS FOLLOWS:

ALL CONCRETE - 4000 PSI

ALL CONCRETE EXPOSED TO WEATHER SHALL CONTAIN 6% (± 1%) AIR ENTRAINMENT.

REINFORCING BARS SHALL CONFORM TO ASTM A615, GRADE 60.

WELDED WIRE FABRIC REINFORCING SHALL CONFORM TO ASTM A1064 AND BE FURNISHED IN FLAT SHEETS AND INSTALLED ON CHAIRS OR PRECAST CONCRETE BLOCKS.

NO TACK WELDING OF REINFORCING IN THE FIELD IS PERMITTED.

PROVIDE CORNER BARS AT ALL LOCATIONS WHERE REINFORCEMENT CHANGES DIRECTION.

PROVIDE STRAIGHT AND DIAGONAL BARS AT EDGES OF ALL OPENINGS.

REINFORCING EMBEDMENT AND LAP SPLICES (INCHES) FOR 4000 PSI CONCRETE

	OTHER		TOP*	
BAR SIZE	ANCHORAGE	SPLICE	ANCHORAGE	SPLICE
# 3	15	19	19	24
# 4	19	25	25	33
# 5	24	31	31	41
# 6	29	37	37	49
# 7	42	54	54	71
# 8	48	62	62	81
# 9	54	70	70	91
#10	60	78	78	101
#11	66	85	85	111

* HORIZONTAL BARS WITH MORE THAN 12" OF CONCRETE BELOW BAR

PROVIDE DOVETAIL ANCHORS AT 2'-0" ON CENTER FOR ALL MASONRY FACED CONCRETE WALLS.

CLEAR MINIMUM COVER OF CONCRETE OVER REINFORCING BARS SHALL BE AS FOLLOWS:

CONCRETE PLACED AGAINST EARTH	3"
CONCRETE EXPOSED TO EARTH OR WEATHER	
#6 TO #18 BARS	2"
#5 BAR OR SMALLER	1 1/2"
CONCRETE NOT EXPOSED TO EARTH OR WEATHER	
SLABS & WALLS #11 BAR AND SMALLER	3/4"
CONCRETE BEAMS, COLUMNS, & PIERS	1 1/2"

WOOD:

MATERIALS:

FRAMING LUMBER 2x6 AND LARGER SHALL BE SPF (SPRUCE/PINE/FIR) NO. 2 GRADE USED AT A MAXIMUM MOISTURE CONTENT OF 19% WITH THE FOLLOWING MINIMUM ALLOWABLE STRESSES:

Fb= 875 PSI
Fv= 135 PSI
Fc= 1,150 PSI
E= 1,400,000 PSI

SHEATHING:

40/20 APA RATED 5/8" ROOF SHEATHING EXPOSURE 1.
24/16 APA RATED 1/2" STRUCTURAL 1 WALL SHEATHING EXPOSURE 1.

ALL SHEATHING TO BE NAILED WITH 10d NAILS AT 6" ON CENTER AT PANEL EDGES AND 12" ON CENTER AT INTERMEDIATE SUPPORTS UNLESS NOTED OTHERWISE. PROVIDE SOLID BLOCKING TO MATCH WALL STUD SIZE AT ALL FREE EDGES OF WALL SHEATHING AND NAIL w/ 10d NAILS AT 6" O.C.

UNLESS NOTED OTHERWISE, CONNECTIONS SHALL BE MADE PER THE "RECOMMENDED FASTENING SCHEDULE", IN REFERENCED BUILDING CODE. STAPLES NOT PERMITTED FOR FASTENING APA RATED SHEATHING.

DETAIL, FABRICATE AND ERECT STRUCTURAL WOOD IN ACCORDANCE WITH THE 2015 EDITION WITH THE NATIONAL DESIGN SPECIFICATION FOR WOOD CONSTRUCTION.

PROVIDE 2x6 FRAMING w/ U26 HANGER EACH END AT ALL ROOF SUMP PANS AND OTHER OPENINGS TO SUPPORT EDGE OF ROOF DECK.

ALL WOOD IN CONTACT WITH CONCRETE OR MASONRY SHALL BE PRESERVATIVE TREATED AND MEET THE REQUIREMENTS OF AWPA.

ALL BEAMS AND JOISTS SHALL BE CUT FOR FULL UNIFORM BEARING AT SUPPORTS.

ALL WOOD CONSTRUCTION CONNECTORS SHALL BE MANUFACTURED BY SIMPSON STRONG-TIE COMPANY AND SHALL BE FASTENED PER THE MANUFACTURER'S RECOMMENDATIONS.

WOOD FRAMING FOR PLATES AND SILLS SHALL BE KEPT IN A DRY ENVIRONMENT FOR THE DURATION OF CONSTRUCTION IN ORDER TO ENSURE THE MOISTURE CONTENT OF THE WOOD DOES NOT INCREASE ABOVE 15%.

INTERIOR PARTITION WALLS SHALL NOT BE RIGIDLY ATTACHED TO THE UNDERSIDE OF THE TRUSSES ABOVE. PROVIDE SLIP TRACK OR SIMPSON HTC TRUSS CLIP AT EACH STUD WITH 1" GAP BETWEEN STUD AND PLATE.

GPD GROUP®
Glaus, Pyle, Schomer, Burns & DeHaven, Inc.
520 South Main Street, Suite 2531
Akron, OH 44311
330.572.2100 Fax 330.572.2101

CONTRACT DATE:	05.10.21
BUILDING TYPE:	TYPE M
PLAN VERSION:	-
BRAND DESIGNER:	-
SITE NUMBER:	4320
STORE NUMBER:	2021188.16

TACO BELL

63 OHIO RIVER PLAZA
GALLIPOLIS, OH 45631

REPAIR/
MAINTENANCE
REMODEL

GENERAL NOTES

S0.1

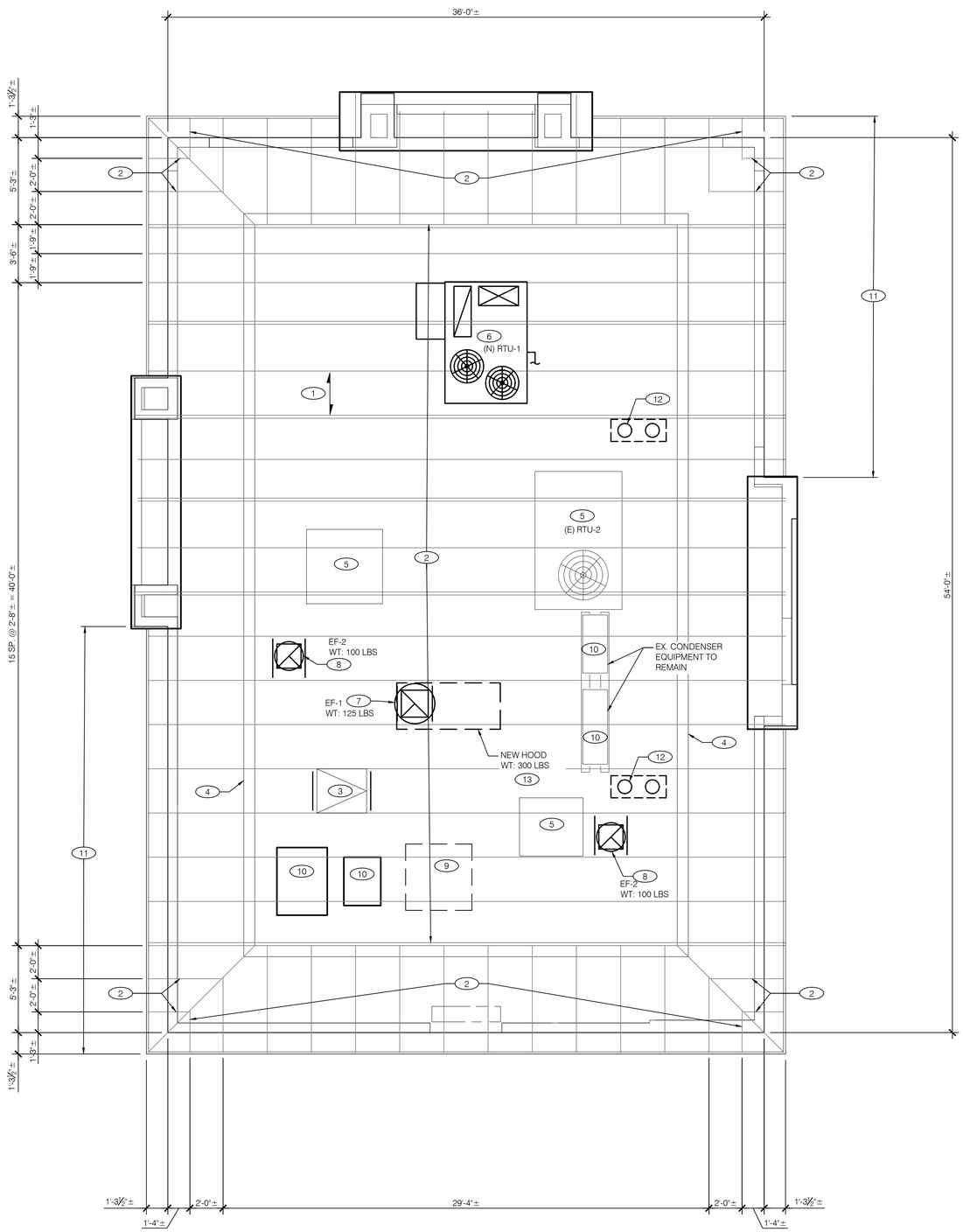

ROOF FRMING PLAN 1/4" = 1'-0" **1**

1. REFER TO SHEET S0.1 FOR GENERAL STRUCTURAL NOTES.
2. COORDINATE ALL NEW MECHANICAL EQUIPMENT WEIGHTS, LOCATIONS, AND ROOF PENETRATIONS WITH ARCH'L AND MECH'L. PLANS.
3. THE EXISTING CONSTRUCTION IS BASED ON AS-BUILT DRAWINGS BY TACO BELL ARCHITECTURE AND ENGINEERING DEPARTMENT, DATED 08/12/1990 IN COMBINATION WITH SITE VISIT COMPELTED BY GPD GROUP. CONTRACTOR SHALL FIELD VERIFY ALL THE DIMENSIONS AND ALL EXISTING CONSTRUCTION CONDITIONS PRIOR TO ORDERING ANY MATERIALS OR STARTING ANY WORK. COORDINATE ANY DISCREPANCIES WITH THE ARCHITECT BEFORE ORDERING MATERIALS.
4. THE CONTRACTOR SHALL PROVIDE, DESIGN, MONITOR AND MAINTAIN ALL NECESSARY TEMPORARY AND PERMANENT SYSTEMS (SHORING, BRACING, GUYS, FALSEWORK, FORMWORK, SHEETING, ETC.) TO ENSURE THE INTEGRITY OF THE STRUCTURE AT ALL STAGES OF CONSTRUCTION. ALL WORK SHALL BE PERFORMED WITHOUT DAMAGE TO ADJACENT EXISTING WORK.
5. THE EXISTING ROOF TRUSSES ARE ADEQUATE FOR THE SUPPORT OF THE WEIGHTS OF THE NEW ROOFTOP EQUIPMENT (RTU-1) & CURB (1280 LBS) WITHOUT STRUCTURAL MODIFICATIONS/REINFORCING BASED ON THE WEIGHTS OF THE EXISTING ROOFTOP EQUIPMENT (1050 LBS). CONTRACTOR TO FIELD VERIFY THE WEIGHTS OF THE EXISTING ROOFTOP EQUIPMENT PRIOR TO REMOVING THE EQUIPMENT AND REPORT ANY DEVIATIONS FROM THE ASSUMED UNIT WEIGHTS TO THE E.O.R. FOR FURTHER EVALUATION.
6. WHERE SLAB TRENCHING IS REQUIRED FOR UNDERGROUND UTILITIES, REFER TO DETAIL 1/S4.0 FOR TYPICAL SLAB TRENCHING DETAIL. COORDINATE WITH ARCHITECTURAL AND PLUMBING PLANS FOR NEW UNDERGROUND UTILITIES.

GENERAL NOTES **A**

1. EXISTING ROOF DECKING IS CONSTRUCTED USING 3/4" PLYWOOD WITH RIGID INSULATION AND MEMBRANE.
2. EXISTING WOOD ROOF TRUSSES. CONTRACTOR TO FIELD VERIFY LOCATIONS.
3. EXISTING ROOF ACCESS HATCH OPENING TO REMAIN.
4. EXISTING MANSARD ROOF WALL.
5. EXISTING ROOF EQUIPMENT TO REMAIN.
6. EXISTING RTU TO BE REPLACED. REFER TO MECH'L. REUSE EXISTING CURB WITH CURB ADAPTOR. REFER TO MECHANICAL DRAWINGS FOR ADDITIONAL INFORMATION.
7. EXISTING EXHAUST FAN AND CURB TO BE REMOVED AND REPLACED PER MECH'L. PLANS.. ADD (2) 2x6 BLOCKING WITH LUS26-2 FACE MOUNT HANGERS EACH END AS REQUIRED TO SUPPORT NEW EXHAUST FAN CURB. FASTEN CURB TO BLOCKING PER CURB MANUFACTURER REQUIREMENTS.
8. EXISTING EXHAUST FAN TO BE REMOVED AND REPLACED. EXISTING CURB TO REMAIN. REFER TO MECHANICAL PLAN FOR ADDITIONAL INFORMATION.
9. EXISTING MAKE-UP AIR UNIT AND CURB TO BE REMOVED AND ROOF PENETRATIONS TO BE INFILLED AND PATCHED. REFER TO DETAIL 3/S4.0 FOR ROOF REPAIR DETAIL.
10. REMOVE EXISTING CONDENSERS. PATCH ROOFING AS REQUIRED. REFER TO MECHANICAL AND ARCHITECTURAL PLANS FOR ADDITIONAL INFORMATION.
11. A 1" TO 2" GAP (APPROX.) WAS OBSERVED IN EIFS BETWEEN SOFFIT FRAMING AND UNDERSIDE OF ROOF TRUSS OVERHANG. REMOVE EXISTING FINISHES AND VERIFY CONDITION AND CONNECTION OF SOFFIT FRAMING TO TRUSS OVERHANG. REPAIR AS REQUIRED TO ENSURE SOFFIT FRAMING IS SUFFICIENTLY CONNECTED/ANCHORED TO FRAMING. REPAIR AND/OR REPLACE DAMAGED/DETERIORATED MEMBERS IN-LIKE KIND TO MATCH ORIGINAL CONSTRUCTION.
12. EXISTING ROOF DRAIN. CONTRACTOR TO REMOVE AND REPLACE ROOF DRAINS. CONTRACTOR TO REPAIR/REPLACE DECKING IN-KIND AT ROOF DRAINS WHERE DECKING IS FOUND TO BE DAMAGED AND/OR DETERIORATED. REFER TO ARCHITECTURAL DRAWINGS FOR ADDITIONAL INFORMATION.
13. EXISTING HOOD TO BE REPLACED WITH NEW HOOD PER MECHANICAL PLANS. REFER TO DETAIL 4/S4.0 FOR HOOD SUPPORT AT ROOF FRAMING IF EXISTING SUPPORTS ARE NOT ABLE TO BE REUSED.

KEY NOTES **B**

GPD GROUP®
Glaus, Pyle, Schomer, Burns & DeHaven, Inc.
520 South Main Street, Suite 2531
Akron, OH 44311
330.572.2100 Fax 330.572.2101

CONTRACT DATE:	05.10.21
BUILDING TYPE:	TYPE M
PLAN VERSION:	-
BRAND DESIGNER:	-
SITE NUMBER:	4320
STORE NUMBER:	2021188.16

TACO BELL

63 OHIO RIVER PLAZA
GALLIPOLIS, OH 45631

REPAIR/
MAINTENANCE
REMODEL

ROOF FRAMING PLAN

S2.0

NOT USED NTS **17**

NOT USED NTS **18**

NOT USED NTS **19**

NOT USED NTS **20**

NOT USED NTS **13**

NOT USED NTS **14**

NOT USED NTS **15**

NOT USED NTS **16**

NOT USED NTS **9**

NOT USED NTS **10**

NOT USED NTS **11**

NOT USED NTS **12**

NOT USED NTS **5**

NOT USED NTS **6**

NOT USED NTS **7**

NOT USED NTS **8**

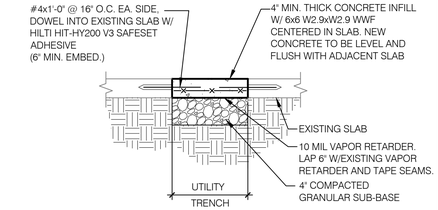

NOTE: COORDINATE EXTENT OF SLAB REPAIR WITH OTHER DISCIPLINES.

NOTE: EXISTING SLAB CONSTRUCTION IS 4" CONCRETE SLAB-ON-GRADE BASED ON EXISTING CONSTRUCTION DRAWINGS. CONTRACTOR TO VERIFY EXISTING SLAB-ON-GRADE CONSTRUCTION PRIOR TO ORDERING AND/OR FABRICATIONS OF MATERIALS FOR THE PROJECT.

TYP. SLAB TRENCH REPAIR DETAIL 3/4" = 1'-0" **1**

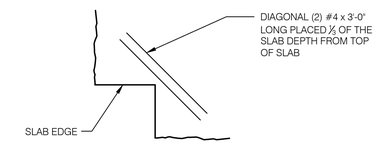

AT RE-ENTRANT CORNERS

TYP. SLAB CORNER REINF. DETAILS N.T.S. **2**

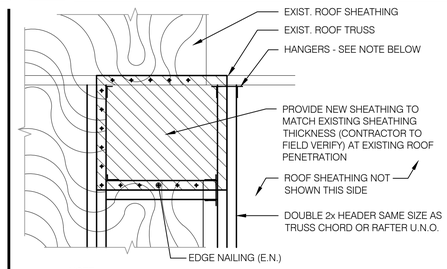

NOTE:
HANGERS SHALL BE "SIMPSON" STANDARD "LUS" AT ROOF TRUSS OR RAFTERS SHALL BE JOINED TOGETHER AS FOLLOWS:
1. 10" OR LESS NOM. DEPTH - 16d @ 12" O.C. STAGGERED
2. MORE THAN 10" - (2)-16d @ 12" O.C.
3. ALL EDGE NAILING (E.N.) OF ROOF SHEATHING SHALL BE 6" O.C. MIN.

PLAN VIEW

ROOF DECKING INFILL DETAIL NTS **3**

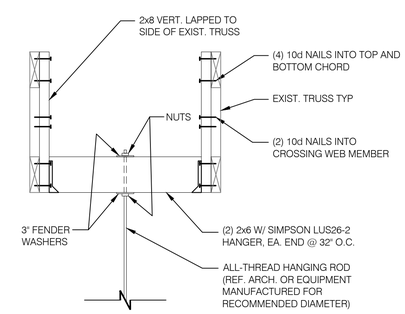

HOOD HANGING DETAIL 3/4" = 1'-0" **4**

GPD GROUP®
Glaus, Pyle, Schomer, Burns & DeHaven, Inc.
520 South Main Street, Suite 2531
Akron, OH 44311
330.572.2100 Fax 330.572.2101

△
△
△
△
△

CONTRACT DATE:	05.10.21
BUILDING TYPE:	TYPE M
PLAN VERSION:	-
BRAND DESIGNER:	-
SITE NUMBER:	4320
STORE NUMBER:	2021188.16

TACO BELL

63 OHIO RIVER PLAZA
GALLIPOLIS, OH 45631

REPAIR/ MAINTENANCE REMODEL

SECTIONS AND DETAILS

S4.0

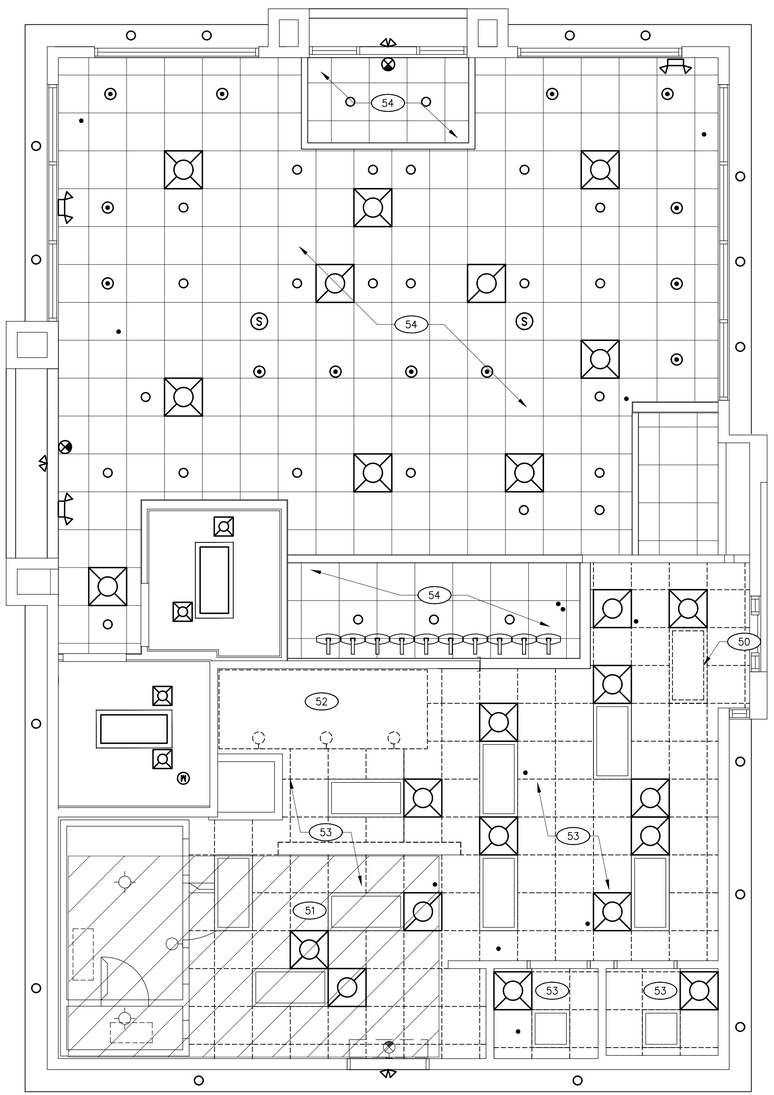

N

DEMOLITION REFLECTED CEILING PLAN 1/4" = 1'-0" | 2

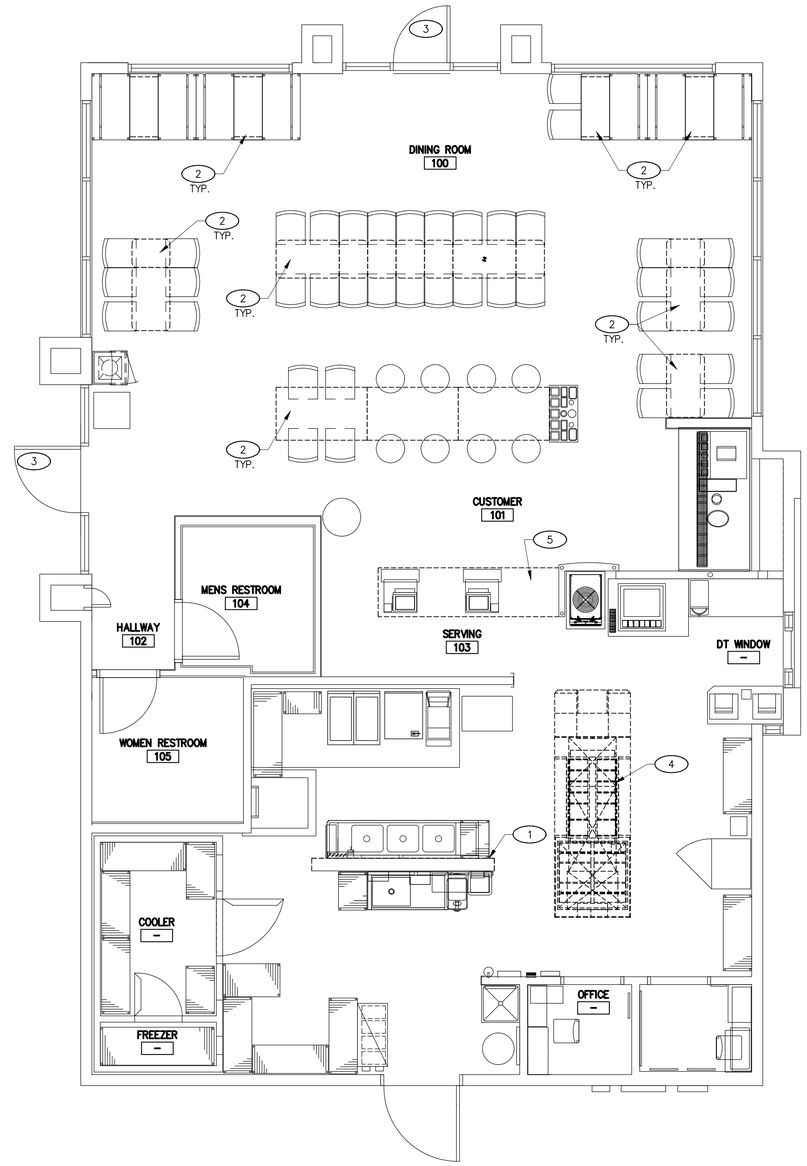

N

DEMOLITION FLOOR PLAN 1/4" = 1'-0" | 1

DEMOLITION FLOOR PLAN

1. REMOVE EXISTING STUDS, SUBSTRATE AND WALL FINISH ALONG BACKSIDE OF 3-COMP SINK.
2. REMOVE TABLES TOPS THROUGHOUT DINING ROOM SAVE BASES FOR REUSE. SEATING TO REMAIN. PROTECT DURING CONSTRUCTION.
3. REMOVE EXISTING DOOR CLOSER, PREPARE FOR INSTALLATION OF NEW.
4. REMOVE EXISTING DUAL LINE PREPARE FOR INSTALLATION OF NEW.
5. REMOVE EXISTING COUNTERTOP. EXISTING STRUCTURE TO REMAIN. SAVE EQUIPMENT FOR REINSTALLATION.

KEY NOTES | E

DEMOLITION FLOOR PLAN

1. CONTRACTOR TO FIELD VERIFY ALL DIMENSIONS & CONDITIONS ON SITE.
2. CONTRACTOR TO FIELD VERIFY AND REPLACE ALL FIRE SYSTEMS.
3. DEMOLITION & REMOVAL OF SYSTEMS NOTED INCLUDES ALL WORK REQUIRED TO ACHIEVE SCOPE OF NEW WORK AND DESIGN INTENT.
4. SEE REFLECTED CEILING PLAN FOR MISC. DEMOLITION NOTES FOR ITEMS ABOVE.
5. DRAWINGS OF EXISTING CONDITIONS HAVE BEEN COMPILED FROM EXISTING DATA SUPPLIED BY THE OWNER TO THE ARCHITECT. THE ARCHITECT MAKES NO WARRANTY, EITHER EXPRESSED OR IMPLIED, FOR THE ACCURACY OF THE COMPLETENESS OF THE EXISTING INFORMATION RECORDED. THE CONTRACTOR SHALL FIELD VERIFY ALL EXISTING CONDITIONS AND NOTIFY THE ARCHITECT IMMEDIATELY OF ANY DISCREPANCIES OR CONFLICTS THAT MIGHT ARISE IN THE COURSE OF THE DEMOLITION WORK.
6. THE OWNER RESERVES THE RIGHT TO SALVAGE ANY DEMOLISHED ITEM. VERIFY ITEMS TO BE SALVAGED WITH THE OWNER PRIOR TO THE START OF DEMOLITION. REMOVE, PROTECT, CLEAN, REPAIR FOR REUSE AND TURN OVER SUCH ITEMS AS DIRECTED BY THE OWNER
7. EXISTING SLAB CONSTRUCTION IS 4" CONCRETE SLAB-ON-GRADE BASED ON EXISTING CONSTRUCTION DRAWINGS. CONTRACTOR TO VERIFY EXISTING SLAB-ON-GRADE CONSTRUCTION PRIOR TO ORDERING AND/OR FABRICATIONS OF MATERIALS FOR THE PROJECT. WHERE EXISTING SLAB IS TO BE REMOVED, REPAIR SLAB PER STRUCTURAL DETAIL 1/S4.0.
8. GC SHALL INSPECT ROOF FOR POSSIBLE DAMAGE. REPAIR AS NEEDED.

DEMOLITION REFLECTED CEILING PLAN

1. CONTRACTOR TO FIELD VERIFY ALL DIMENSIONS & CONDITIONS ON SITE.
2. CONTRACTOR TO FIELD VERIFY AND REPLACE ALL FIRE SYSTEMS.
3. DEMOLITION & REMOVAL OF SYSTEMS NOTED INCLUDES ALL WORK REQUIRED TO ACHIEVE SCOPE OF NEW WORK AND DESIGN INTENT.

GENERAL NOTES | A

EXISTING CONSTRUCTION TO BE REMOVED

EXISTING CONSTRUCTION

WALL LEGEND | B

EXISTING 2'x2' SUSPENDED CEILING GRID & TILES TO REMAIN

EXISTING GYPSUM BOARD CEILING TO REMAIN

EXISTING 2'X4' FLUORESCENT LIGHT FIXTURE TO REMAIN

EXISTING LIGHT TO BE REMOVED.

EXISTING DIFFUSER TO REMAIN

EXISTING EXHAUST TO REMAIN

EXISTING EXHAUST TO REMAIN

EXISTING RECESSED CAN LIGHT TO REMAIN.

EXISTING RECESSED LIGHT TO REMAIN.

EXISTING EMERGENCY LIGHT TO REMAIN.

EXISTING CEILING-MOUNTED EXIT SIGN TO REMAIN

CEILING LEGEND | C

DEMOLITION REFLECTED CEILING PLAN

50 REMOVE EXISTING LIGHT FIXTURE.

51 REMOVE EXISTING SPRINKLER HEADS IN DESIGNATED AREA.

52 REMOVE EXISTING HOOD, CONNECTED MAKE UP AIR DUCT, CONNECTED SUPPLY AIR DUCT, CONNECTED EXHAUST AIR DUCT, EXHAUST FAN AND ANSUL SYSTEM.

53 REMOVE EXISTING CEILING GRID AND TILE THROUGHOUT KITCHEN. TEMPORARILY SUSPEND LIGHT FIXTURES, DIFFUSERS/RETURNS AND EQUIPMENT AS REQUIRED.

54 REMOVE AN REPLACE CEILING TILES IN DINING ROOM. GRID, LIGHTING AND DIFFUSERS/RETURNS ARE TO REMAIN.

KEY NOTES | D

GPD GROUP®
Glaus, Pyle, Schomer, Burns & DeHaven, Inc.
520 South Main Street, Suite 2531
Akron, OH 44311
330.572.2100 Fax 330.572.2101

ADDENDUM #1	09.01.22

CONTRACT DATE:	05.10.21
BUILDING TYPE:	TYPE M
PLAN VERSION:	-
BRAND DESIGNER:	-
SITE NUMBER:	4320
STORE NUMBER:	2021188.16

TACO BELL

63 OHIO RIVER PLAZA
GALLIPOLIS, OH 45631

REPAIR/
MAINTENANCE
REMODEL

DEMOLITION PLANS

AD.1

ASDASD

FURNITURE SCHEDULE

TAG	QTY.	DESCRIPTION:	TAG	QTY.	DESCRIPTION:
T-405e	7	LAMINATE TABLE – 24 X 20 X 30 – 2 TOP	T-5X1e	2	COUNTER TOP
T-407e	6	LAMINATE TABLE – 24 X 48 X 30 – 4 TOP	T-5X2e	1	COUNTER TOP – ADA
T-408e	3	LAMINATE TABLE ADA – 24 X 48 X 30 – 4 TOP			

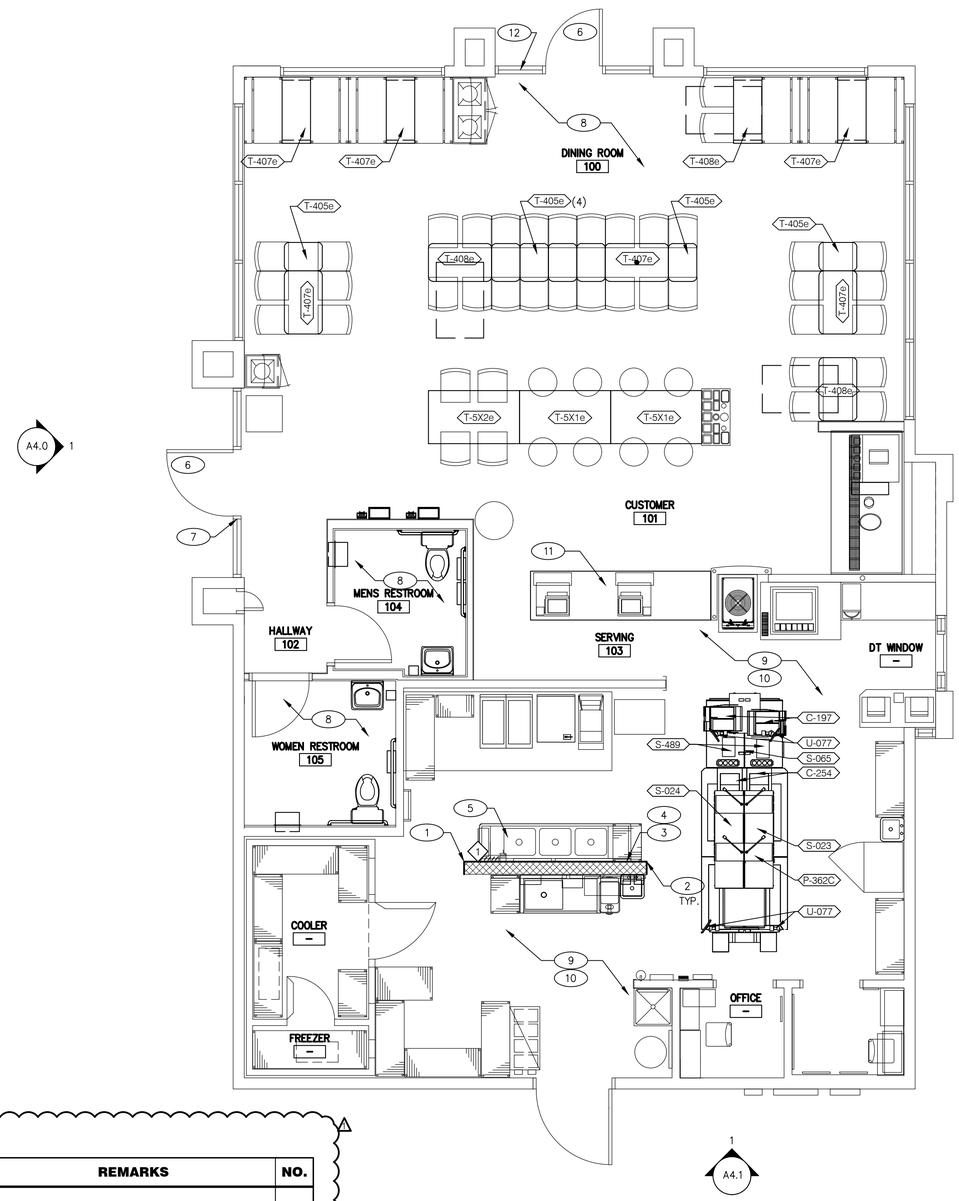

EQUIPMENT SCHEDULE

NO.	QTY	G.C. INST.	ITEM DESCRIPTION	MFR. & MODEL NUMBER	PLUMB	ELECT	GAS	REMARKS	NO.
			C COOKING EQUIPMENT						
C-197	2	X	SPLIT LID CLAM SHELL TOASTER	DOUGHPRO #SL15775TBA (STAR OPTIONAL)		X		POWERED BY PRODUCTION LINE	C-197
C-254	2	X	CHEESE MELTER (SINGLE)	A. J. ANTUNES # CM-100	X	X		POWERED BY PRODUCTION LINE	C-254
P-362C	1	X	FLEX DUAL LINE	FRANKE	X	X			P-362C
S-023	1	X	WARMER,EVO TACO TOWER,TB,208V, L TO R UNIT	CARTER HOFFMAN #EVOR208		X		MOUNT ON PRODUCTION LINE OVER SHELF	S-023
S-024	1	X	WARMER,EVO TACO TOWER,TB,208V, R TO L UNIT	CARTER HOFFMAN #EVOL208		X		MOUNT ON PRODUCTION LINE OVER SHELF	S-024
S-065	1	X	DESSERT TOWER	HATCO #GRBW-24D		X		MOUNT ON PRODUCTION LINE OVER SHELF	S-065
S-489	2	X	SCALE	EDLUND					S-489
U-077	4		TABLET 10.1"	EN POINTE TECHNOLOGIES - TABLET E611101		X			U-077

FLOOR PLAN 1/4" = 1'–0" | **1**

GENERAL NOTES | A

1. CONTRACTOR TO FIELD VERIFY ALL DIMENSIONS & CONDITIONS ON SITE.
2. CONTRACTOR TO FIELD VERIFY AND MAINTAIN ALL FIRE SYSTEMS.
3. DEMOLITION & REMOVAL OF SYSTEMS NOTED INCLUDES ALL WORK REQUIRED TO ACHIEVE SCOPE OF NEW WORK AND DESIGN INTENT.

KEY NOTES | B

1. NEW INTERIOR NON–LOAD BEARING WALL. REFER TO WALL LEGEND.
2. INSTALL NEW STAINLESS STEEL CORNER GUARDS WITH 2" LEGS. SEE DETAILS 4 AND 13/A6.0.
3. INSTALL NEW QUARRY TILE BASE AT BOTTOM OF WALL.
4. REPAIR EXISTING CONCRETE AND FLOOR TILE.
5. NEW FLOOR DRAIN. SEE PLUMBING.
6. INSTALL NEW DOOR CLOSER ON EXISTING STOREFRONT ENTRY DOOR, DORMA 8616X689.
7. REPAIR EXISTING LOOSE STOREFRONT FRAMING.
8. REPAIR ANY BROKEN FLOOR TILE AND STEAM CLEAN FLOOR TILE AND GROUT.
9. REPAIR ANY BROKEN FLOOR TILE AND COVE BASE AS NEEDED IN KITCHEN. STEAM CLEAN FLOOR TILE AND GROUT.
10. REPAIR DAMAGED FRP AND TRIM AS REQUIRED THROUGHOUT BOH.
11. INSTALL NEW COUNTERTOP ON EXISTING STRUCTURE. REINSTALL EXISTING EQUIPMENT.
12. REPLACE EXISTING SIDE LIGHT GLAZING IN EXISTING FRAME. F.V. WHICH SIDE.

LEGEND | C

EXISTING CONSTRUCTION

NEW INTERIOR WALL : WD STUDS AT 16" O.C.

1 2X6 WOOD STUDS

WALL SUBSTRATES:
– KITCHEN WALLS AND DINING ROOM CLOSET:
1/2" CEMENT WALLBOARD FROM T.O. SLAB TO 12" AFF. AT 12" AFF, USE 1/2" CDX PLYWOOD W/FRP SURFACE FINISH TO 6" ABOVE CEILING HEIGHT U.O.N.

GPD GROUP®
Glaus, Pyle, Schomer, Burns & DeHaven, Inc.
520 South Main Street, Suite 2531
Akron, OH 44311
330.572.2100 Fax 330.572.2101

ADDENDUM #1	09.01.22

CONTRACT DATE:	05.10.21
BUILDING TYPE:	TYPE M
PLAN VERSION:	-
BRAND DESIGNER:	-
SITE NUMBER:	4320
STORE NUMBER:	2021188.16

TACO BELL

63 OHIO RIVER PLAZA
GALLIPOLIS, OH 45631

REPAIR/
MAINTENANCE
REMODEL

FLOOR PLAN

A2.0

ASDASD

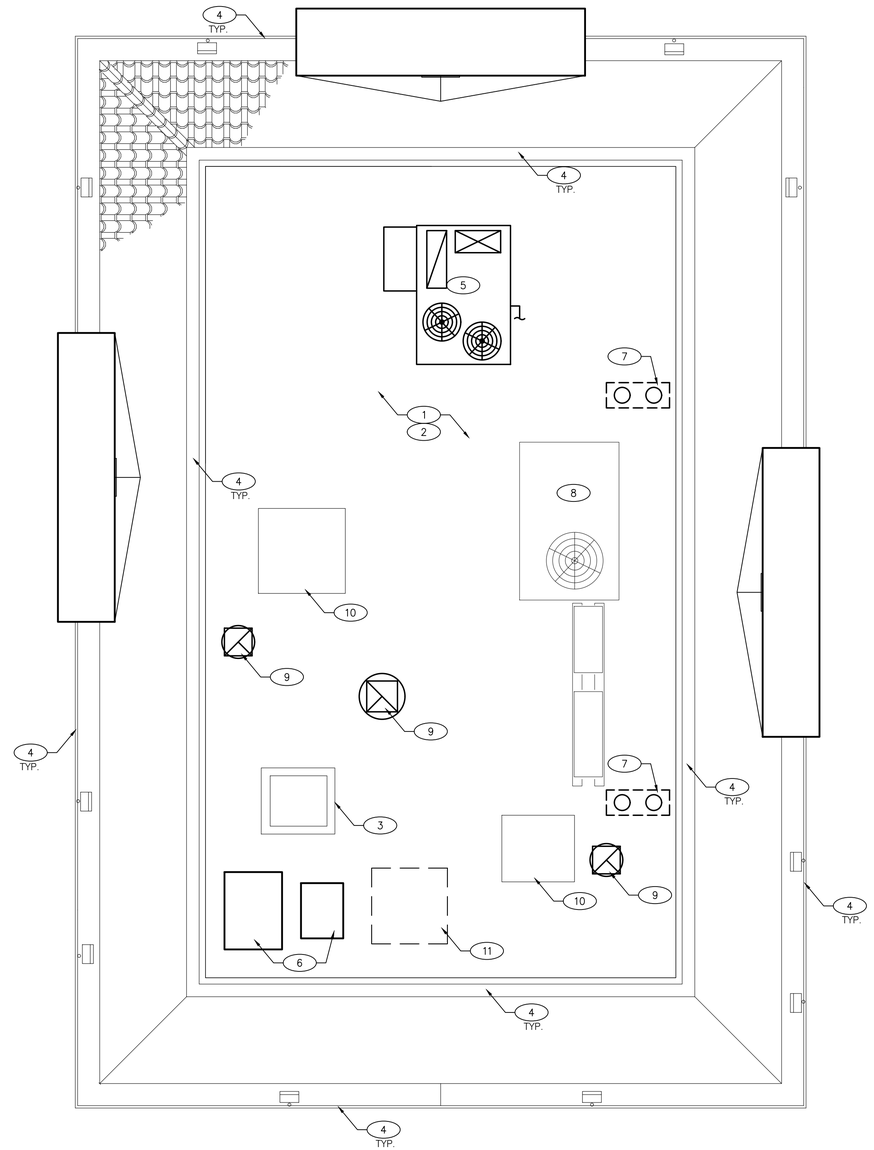

ROOF PLAN 1/4" = 1'-0" **1**

1. REMOVE/REPLACE ALL EXISTING ROOF INSULATION WITH NEW (R-30).
2. REMOVE EXISTING ROOF MEMBRANE. INSTALL "DURO-LAST" SINGLE PLY ROOF MEMBRANE OVER MINIMUM R-30 RIGID INSULATION BOARD OVER 5/8" APA RATED EXTERIOR GRADE PLYWOOD OVER TRUSSES. INSTALL PER MANUFACTURERS SPECIFICATIONS.
3. REPLACE EXISTING ROOF HATCH WITH NEW.
4. REPLACE EXISTING ROOF COPING WITH NEW. PAINT CYBERSPACE SW7076.
5. NEW RTU IN SAME LOCATION. SEE MECHANICAL.
6. NEW CONDENSING UNIT IN SAME LOCATION. SEE MECHANICAL.
7. NEW COMBINATION PRIMARY AND OVERFLOW ROOF DRAIN. SEE PLUMBING AND 1/A6.0.
8. EXISTING RTU TO REMAIN.
9. NEW EXHAUST FAN IN SAME LOCATION. SEE MECHANICAL.
10. EXISTING ROOF STRUCTURE TO REMAIN.
11. REMOVE EXISTING MAKE UP AIR UNIT, ROOF CURB, ASSOCIATED DUCTWORK, AND CONTROLS SERVING EXISTING KITCHEN HOOD SYSTEM BELOW BEING DEMOLISHED AND REPLACED. INFILL ROOF WITH SIMILAR CONSTRUCTION.

KEY NOTES | **B**

GPD GROUP®
Glaus, Pyle, Schomer, Burns & DeHaven, Inc.
520 South Main Street, Suite 2531
Akron, OH 44311
330.572.2100 Fax 330.572.2101

CONTRACT DATE:	05.10.21
BUILDING TYPE:	TYPE M
PLAN VERSION:	-
BRAND DESIGNER:	-
SITE NUMBER:	4320
STORE NUMBER:	2021188.16

TACO BELL

63 OHIO RIVER PLAZA
GALLIPOLIS, OH 45631

REPAIR/ MAINTENANCE REMODEL

ROOF PLAN

A3.0

NOTE TO GC:
ENTRANCES SHALL BE IDENTIFIED WITH A SIGN OR STICKER OF THE STANDARD ACCESSIBILITY LOGO

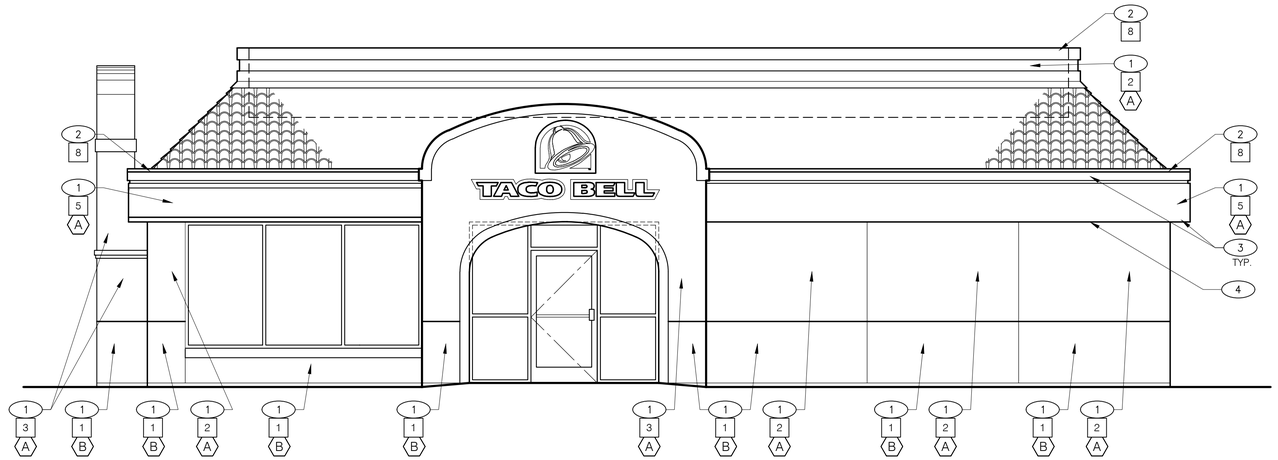

SIDE ENTRY ELEVATION 1/4" = 1'-0" | 1

EXTERIOR FINISH SCHEDULE

SYMBOL	AREA	MANUFACTURER	MATERIAL SPEC	COLOR
1	EXTERIOR WALLS – E.I.F.S.	N/A	MATCH EXISTING	PAINT SW7033 BRAINSTORM BRONZE
2	EXTERIOR WALLS – E.I.F.S.	N/A	MATCH EXISTING	PAINT SW7043 WORLDLY GREY
3	EXTERIOR WALLS – E.I.F.S.	N/A	MATCH EXISTING	PAINT SW 9180 AGED WHITE
4	NOT USED			
5	ACCENT WALL COLOR	EXISTING	MATCH EXISTING	PAINT TB2603C SW PURPLE
6	NOT USED			
7	NOT USED			
8	PARAPET CAP	N/A	GALVANIZED METAL	PAINT SW7055 ENDURING BRONZE

EXTERIOR FINISH SCHEDULE | C

PAINTING OVER EXISTING EIFS/ STUCCO
APPLICATOR MUST DO THEIR DUE DILIGENCE WITH PREPARATION.
PRIMER: 1 COAT SW A24W1100, LOXON CONDITIONER.
FINISH: 2 COATS SW A82-100 SERIES, A-100 EXTERIOR LATEX SATIN.

E.I.F.S. PAINTING NOTES/SPEC | D

A BASE THICKNESS - 1" THICK E.I.F.S.

B BASE THICKNESS -1" THICK E.I.F.S. WITH HIGH IMPACT MESH (ONLY WHERE NOTED). SEE DETAIL 12/A6.0.

E.I.F.S. THICKNESS | E

MISCELLANEOUS:
A. SEE SCOPE OF WORK FOR RESPONSIBILITIES.
B. OWNER REPRESENTATIVE WILL IDENTIFY WHICH PAINT SPECIFICATION WILL BE PRIMARY.

SEALERS (REFER TO SPECS):
A. SEALANT AT ALL WALL AND ROOF PENETRATIONS.
B. SEALANT AT ALL WINDOW AND DOOR FRAMES AT HEAD AND JAMB. DO NOT SEAL SILL @ WINDOWS.
C. DO NOT APPLY SEALANT AT SILL WEEP HOLES.

GENERAL NOTES | A

1. REPLACE EXISTING EIFS WITH NEW. SEE DETAILS 12 & 16/A6.0.
2. REPLACE EXISTING ROOF COPING WITH NEW. MATCH EXISTING.
3. REPLACE EXISTING WOOD FASCIA WITH NEW WHERE NECESSARY. MATCH EXISTING.
4. A 1" TO 2" GAP (APPROX.) WAS OBSERVED IN EIFS BETWEEN SOFFIT FRAMING AND UNDERSIDE OF ROOF TRUSS OVERHANG FROM ENTRY TOWER TO CORNER OF BUILDING. REMOVE EXISTING FINISHES AND VERIFY CONDITION AND CONNECTION OF SOFFIT FRAMING TO TRUSS OVERHANG. REPAIR AS REQUIRED TO ENSURE SOFFIT FRAMING IS SUFFICIENTLY CONNECTED/ANCHORED TO FRAMING. REPAIR AND/OR REPLACE DAMAGED/DETERIORATED MEMBERS IN-LIKE KIND TO MATCH ORIGINAL CONSTRUCTION.

KEYNOTES | B

GPD GROUP®
Glaus, Pyle, Schomer, Burns & DeHaven, Inc.
520 South Main Street, Suite 2531
Akron, OH 44311
330.572.2100 Fax 330.572.2101

CONTRACT DATE:	05.10.21
BUILDING TYPE:	TYPE M
PLAN VERSION:	-
BRAND DESIGNER:	-
SITE NUMBER:	4320
STORE NUMBER:	2021188.16

TACO BELL

63 OHIO RIVER PLAZA
GALLIPOLIS, OH 45631

REPAIR/ MAINTENANCE REMODEL

EXTERIOR ELEVATIONS

A4.0

NOTE TO GC:
ENTRANCES SHALL BE IDENTIFIED WITH A SIGN OR STICKER OF THE STANDARD ACCESSIBILITY LOGO

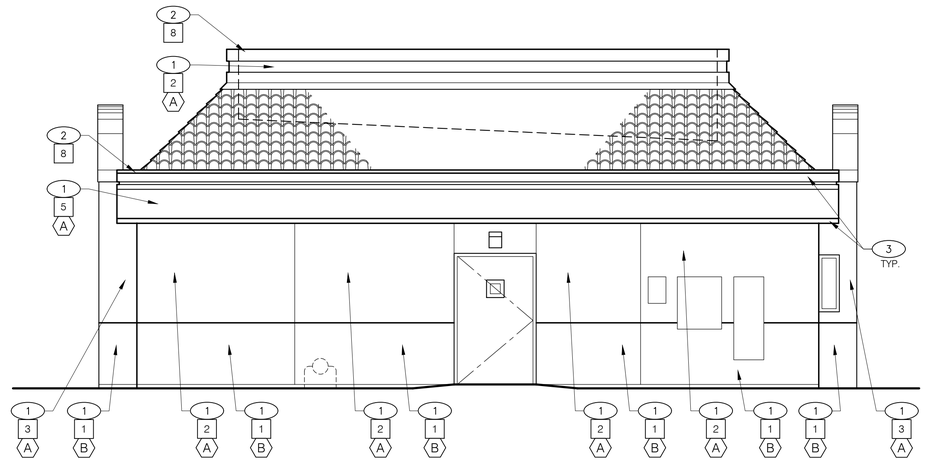

REAR ELEVATION 1/4" = 1'-0" **1**

FRONT ELEVATION 1/4" = 1'-0" **2**

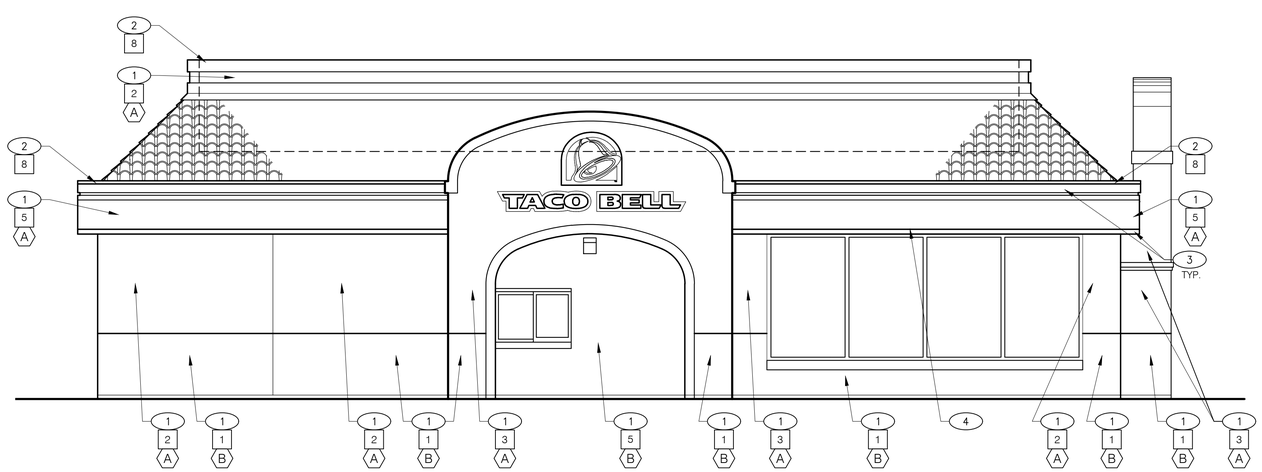

RIGHT SIDE ELEVATION 1/4" = 1'-0" **3**

MISCELLANEOUS:
A. SEE SCOPE OF WORK FOR RESPONSIBILITIES.
B. OWNER REPRESENTATIVE WILL IDENTIFY WHICH PAINT SPECIFICATION WILL BE PRIMARY.

SEALERS (REFER TO SPECS):
A. SEALANT AT ALL WALL AND ROOF PENETRATIONS.
B. SEALANT AT ALL WINDOW AND DOOR FRAMES AT HEAD AND JAMB. DO NOT SEAL SILL @ WINDOWS.
C. DO NOT APPLY SEALANT AT SILL WEEP HOLES.

GENERAL NOTES **A**

1. REPLACE EXISTING EIFS WITH NEW. SEE DETAILS 12 & 16/A6.0.
2. REPLACE EXISTING ROOF COPING WITH NEW. MATCH EXISTING.
3. REPLACE EXISTING WOOD FASCIA WITH NEW WHERE NECESSARY. MATCH EXISTING.
4. A 1" TO 2" GAP (APPROX.) WAS OBSERVED IN EIFS BETWEEN SOFFIT FRAMING AND UNDERSIDE OF ROOF TRUSS OVERHANG FROM DRIVE THRU TOWER TO CORNER OF BUILDING. REMOVE EXISTING FINISHES AND VERIFY CONDITION AND CONNECTION OF SOFFIT FRAMING TO TRUSS OVERHANG. REPAIR AS REQUIRED TO ENSURE SOFFIT FRAMING IS SUFFICIENTLY CONNECTED/ANCHORED TO FRAMING. REPAIR AND/OR REPLACE DAMAGED/DETERIORATED MEMBERS IN-LIKE KIND TO MATCH ORIGINAL CONSTRUCTION.

KEYNOTES **B**

GPD GROUP®
Glaus, Pyle, Schomer, Burns & DeHaven, Inc.
520 South Main Street, Suite 2531
Akron, OH 44311
330.572.2100 Fax 330.572.2101

CONTRACT DATE:	05.10.21
BUILDING TYPE:	TYPE M
PLAN VERSION:	-
BRAND DESIGNER:	-
SITE NUMBER:	4320
STORE NUMBER:	2021188.16

TACO BELL

63 OHIO RIVER PLAZA
GALLIPOLIS, OH 45631

REPAIR/ MAINTENANCE REMODEL

EXTERIOR ELEVATIONS

A4.1

NOT USED 17

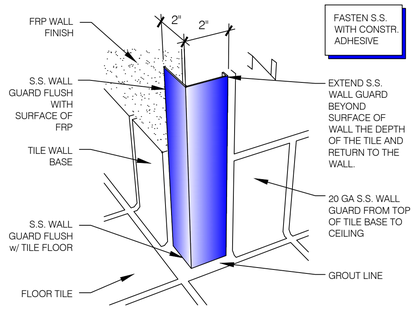

NOTE: THIS DETAIL SHOW A 90 DEGREE CORNER. ADAPT THIS DETAIL AND APPLY WHERE WALLS EXTEND INTO SPACE.

S.S. CORNER & END WALL GUARD N.T.S. 13

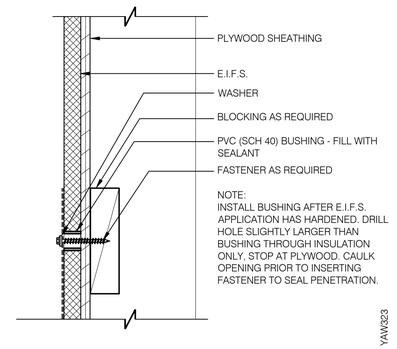

CONNECTION THRU EIFS 3" = 1'-0" 9

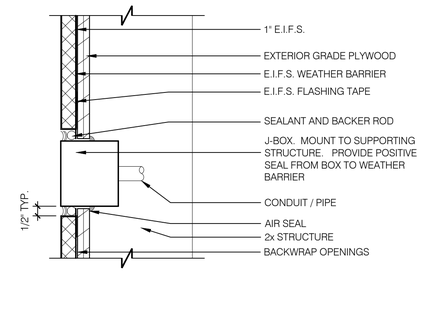

CO2 FILL / J-BOX IN EIFS 3" = 1'-0" 5

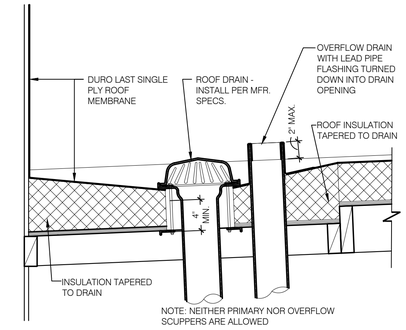

ROOF DRAIN 1-1/2" = 1'-0" 1

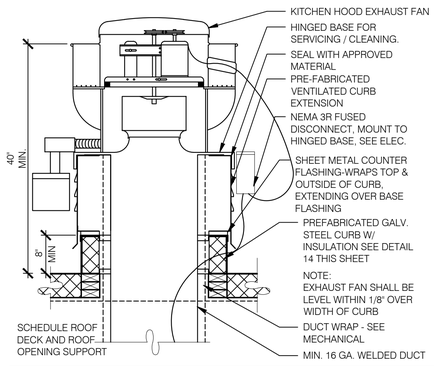

EXHAUST FAN CURB 3" = 1'-0" 18

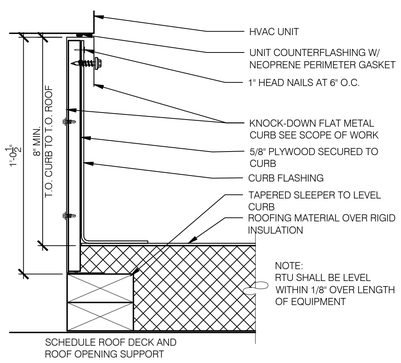

HVAC CURB 3" = 1'-0" 14

NOT USED 10

NOT USED 6

NOT USED 2

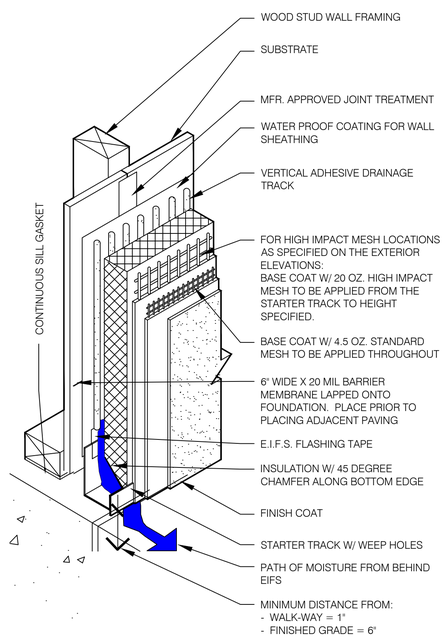

TYP. EIFS BASE TERMINATION N.T.S. 16

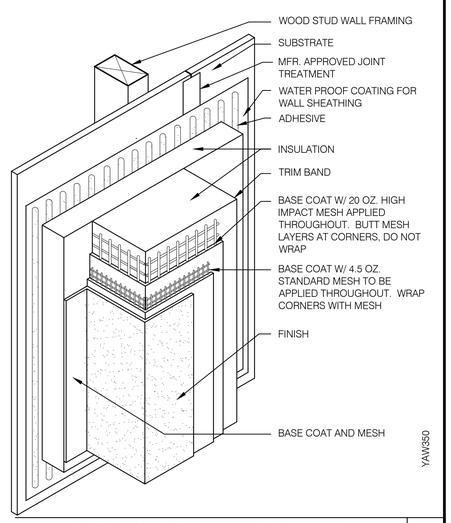

TYP. EIFS TRIM HIGH-IMPACT N.T.S. 12

NOT USED 7

NOT USED 3

NOT USED 8

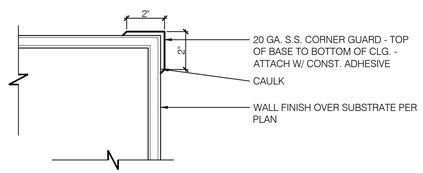

S/S CORNER GUARDS 3" = 1'-0" 4

GPD GROUP®
Glaus, Pyle, Schomer, Burns & DeHaven, Inc.
520 South Main Street, Suite 2531
Akron, OH 44311
330.572.2100 Fax 330.572.2101

CONTRACT DATE:	05.10.21
BUILDING TYPE:	TYPE M
PLAN VERSION:	-
BRAND DESIGNER:	-
SITE NUMBER:	4320
STORE NUMBER:	2021188.16

TACO BELL

63 OHIO RIVER PLAZA
GALLIPOLIS, OH 45631

REPAIR/ MAINTENANCE REMODEL

DETAILS

A6.0

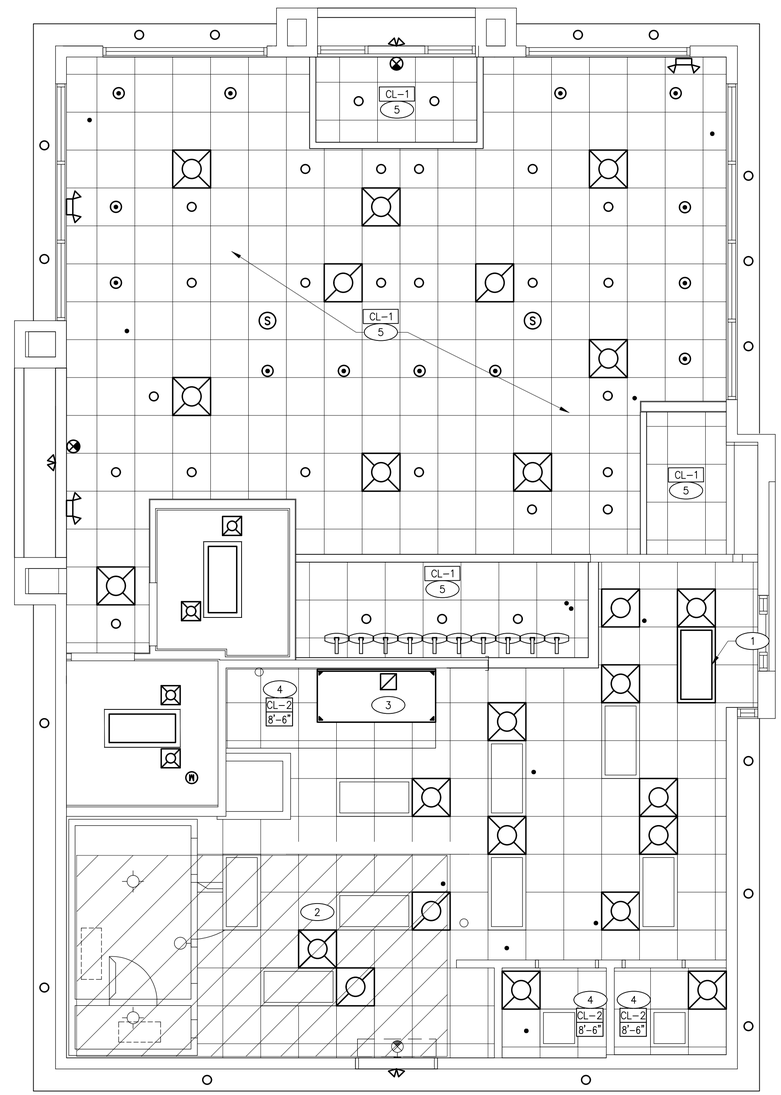

REFLECTED CEILING PLAN 1/4" = 1'-0" | **1**

REFLECTED CEILING PLAN

1. CONTRACTOR TO FIELD VERIFY ALL DIMENSIONS & CONDITIONS ON SITE.
2. CONTRACTOR TO FIELD VERIFY AND MAINTAIN ALL FIRE SYSTEMS.
3. DEMOLITION & REMOVAL OF SYSTEMS NOTED INCLUDES ALL WORK REQUIRED TO ACHIEVE SCOPE OF NEW WORK AND DESIGN INTENT.

GENERAL NOTES | A

REFLECTED CEILING PLAN

1. INSTALL NEW LED TROUFFER LIGHT FIXTURE. SEE ELECTRICAL.
2. INSTALL NEW SPRINKLER HEADS. SEE MECHANICAL.
3. NEW HOOD. SEE MECHANICAL.
4. NEW CEILING TILE AND GRID.
5. INSTALL NEW CEILING TILES IN EXISTING GRID.

KEY NOTES | B

- EXISTING 2'x2' SUSPENDED CEILING GRID & TILES TO REMAIN
- EXISTING 2'X4' FLUORESCENT LIGHT FIXTURE TO REMAIN
- EXISTING DIFFUSER TO REMAIN
- EXISTING EXHAUST TO REMAIN
- EXISTING EXHAUST TO REMAIN
- EXISTING RECESSED CAN LIGHT TO REMAIN.
- EXISTING EMERGENCY LIGHT TO REMAIN.
- EXISTING CEILING-MOUNTED EXIT SIGN TO REMAIN

CL-1	MFR.:	USG
	TYPE:	FROST 414 (24" X 24")
	COLOR:	205 FLAT BLACK
	GRID:	ETR
CL-2	MFR.:	USG
	TYPE:	CLEAN ROOM ACOUSTICAL PANELS
	COLOR:	#050 WHITE
	GRID:	2x2, USG DONN BRAND DX/DXL, 15/16 TEE SYSTEM, INTERMEDIATE DUTY, #050 WHITE

LEGEND | C

GPD GROUP®
Glaus, Pyle, Schomer, Burns & DeHaven, Inc.
520 South Main Street, Suite 2531
Akron, OH 44311
330.572.2100 Fax 330.572.2101

ADDENDUM #1	09.01.22

CONTRACT DATE:	05.10.21
BUILDING TYPE:	TYPE M
PLAN VERSION:	-
BRAND DESIGNER:	-
SITE NUMBER:	4320
STORE NUMBER:	2021188.16

TACO BELL

63 OHIO RIVER PLAZA
GALLIPOLIS, OH 45631

REPAIR/
MAINTENANCE
REMODEL

REFLECTED CEILING PLAN

A7.1

ASDASD

SYMBOL & ABBREV.		DESCRIPTION
	SA/SUP	SUPPLY AIR (RISE/DROP)
	RA/RET	RETURN AIR DUCT (RISE/DROP)
	EA/EXH	EXHAUST AIR DUCT (RISE/DROP)
	CD/SR	CEILING DIFFUSER/SUPPLY REGISTER
	RR/RG	RETURN REGISTER/GRILLE
	ER/EG	EXHAUST REGISTER/GRILLE
	A/C , AC	AIR CONDITIONING
	BDD	BACK DRAFT DAMPER
	CB	CIRCUIT BREAKER
	CLG.	CEILING
	CONN.	CONNECT/CONNECTION
	CONT.	CONTINUATION
	CONT'R	CONTRACTOR
	CFM	CUBIC FEET PER MINUTE
	DET.	DETAIL
	DISC.	DISCONNECT
	DTR	DOWN THRU ROOF
	EF	EXHAUST FAN
	(E)	EXISTING
	GA.	GAGE/GAUGE
	GC	GENERAL CONTRACTOR
	HVAC	HEATING, VENTILATING, AND AIR CONDITIONING
	MFR.	MANUFACTURER
	MECH.	MECHANICAL
	OA/OSA	OUTSIDE AIR
	OBD	OPPOSED BLADE DAMPER
	S/S	STAINLESS STEEL
	TYP.	TYPICAL
	UON	UNLESS OTHERWISE NOTED
	UTR	UP THRU ROOF

MECHANICAL SYMBOLS AND ABBREVIATIONS 5

XX-XXX MARK	CFM	SP	RPM	HP	ELECT	STARTER	ACCESSORIES					MANUFACTURER AND MODEL NUMBER	REMARKS
							DISC	BDD	BIRD SCREEN	V-BELT	D-DR		
EF-1	1050	0.9	1344	0.5	120/1	-	X	-	-	-	X	STRATOVENT #SVDU50HFA	SEE NOTES 1, 2, 3, 4, 8
EF-2	300	0.4	1554	0.1	120/1	X	X	X	X	-	X	STRATOVENT #SVDR10HFA	SEE NOTES 4, 5, 6, 7, 8
EF-3	200	0.4	1361	0.1	120/1	X	X	X	X	-	X	STRATOVENT #SV-DR10HFA	SEE NOTES 4, 5, 6, 7, 8

REMARKS:
1. UL 762 LISTED (GREASE)
2. GREASE CUP WITH DRAIN
3. FACTORY ATTACHED HINGES
4. WEATHERPROOF PRE-WIRED DISCONNECT SWITCH
5. PROVIDE PRE-WIRED SOLID STATE SPEED CONTROLLER
6. GRAVITY BACKDRAFT DAMPER
7. PROVIDE WITH DAMPER TRAY
8. PROVIDE CURB ADAPTER TRANSITION AS REQUIRED.

EXHAUST FAN SCHEDULE 6

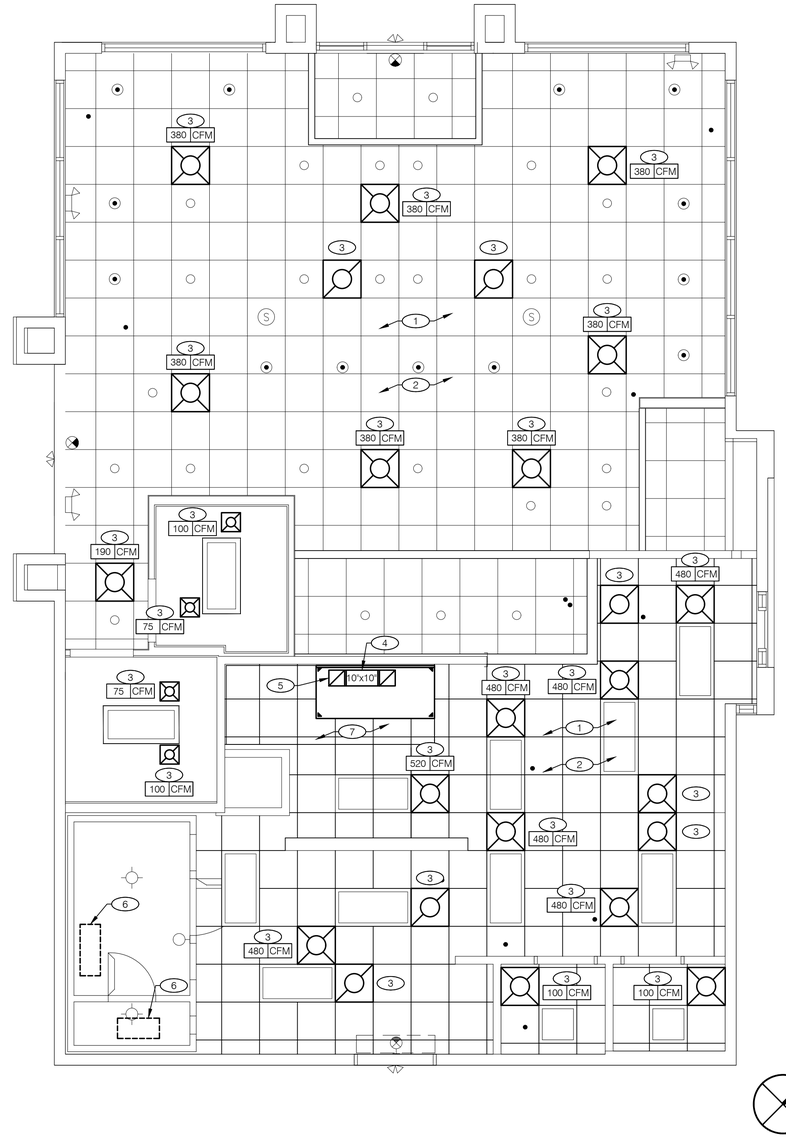

MECHANICAL PLAN 1/4"=1'-0" 3

1. INSTALLATION SHALL CONFORM TO THE ENERGY CONSERVATION DESIGN MANUAL STANDARDS FOR COMMERCIAL BUILDINGS.
2. PROVIDE FRAMING AS REQUIRED FOR DIFFUSER/GRILLE INSTALLATION IN HARD CEILING.
3. ALL WORK AND MATERIALS SHALL COMPLY WITH GOVERNING CODES, SAFETY ORDERS AND REGULATIONS.
4. OBTAIN AND PAY FOR ALL NECESSARY PERMITS, FEES AND INSPECTIONS REQUIRED BY GOVERNING AUTHORITIES.
5. E.C. SHALL PROVIDE CONDUIT FOR LINE AND LOW VOLTAGE WIRING, LINE VOLTAGE WIRING SWITCHES, AND FINAL CONNECTIONS.
6. M.C. SHALL PROVIDE 24V CONTROL WIRING AND FINAL CONNECTIONS. ANY EQUIPMENT THAT IS SUBSTITUTED SHALL FIT IN THE SPACE PROVIDED WITH ADEQUATE ROOM FOR SERVICING, INCLUDING SUBSTITUTE EQUIPMENT NAMED IN THE SPECIFICATIONS. SUBMIT A 1/4" SCALE DRAWING OF ALL EQUIPMENT SUBSTITUTED FOR APPROVAL PRIOR TO INSTALLATION, INCLUDING, BUT NOT LIMITED TO, STRUCTURAL AND ARCHITECTURAL IMPACT, CLEARANCE REQUIREMENTS AND UTILITY REQUIREMENTS.
7. HVAC UNITS SHALL BE MOUNTED LEVEL ON ROOF CURBS.
8. ALL SUPPLY / RETURN DUCTWORK SHALL BE EXTERNALLY INSULATED.
9. ALL SUPPLY / RETURN DUCTS SHALL BE RIGID, WITH THE EXCEPTION OF THE LAST 5'-0", WHICH MAY BE FLEX.
10. SMOKE DETECTOR SHALL BE INSTALLED IN THE ROOFTOP UNIT RETURN AIR SECTION, PRIOR TO ANY OUTSIDE AIR CONNECTIONS, AND SHALL DEACTIVATE ROOFTOP UNIT UPON SENSING SMOKE. INCLUDE SMOKE DETECTOR IN THE SUPPLY AIR SECTION ONLY IF REQUIRED BY LOCAL CODE.
11. ALL HOOD EXHAUST DUCTS SHALL BE RIGID 16 GA MINIMUM, WELDED DUCT. GRIND ALL WELDS SMOOTH. PROVIDE 3M FIRE BARRIER DUCT WRAP FOR ALL HOOD EXHAUST DUCTS.
12. ALL BRANCH DUCTS FEEDING INDIVIDUAL DIFFUSERS SHALL HAVE DAMPERS AT TAKEOFFS FOR AIR BALANCING. PROVIDE ACCESS PANELS TO DAMPERS.
13. ALL OUTSIDE AIR INTAKES SHALL BE A MINIMUM OF 10'-0" FROM EXHAUST FANS AND / OR VENTS.
14. FINAL HVAC SYSTEM TESTING AND BALANCING SHALL BE PERFORMED BY INDEPENDENT AGENT CONTRACTED DIRECTLY BY THE OWNER. A RE-TEST IS MANDATORY FOR A FALSE START (I.E. NO POWER UPON AGENT'S ARRIVAL, EQUIPMENT NOT WIRED, ETC.) AND SHALL BE A COST INCURRED BY THE G.C. IN THE EVENT A SYSTEM / STORE RECEIVES A GRADE OF 5 OR BELOW AS A RESULT OF THE HVAC SYSTEM PERFORMANCE OR OPERATIONAL DEFICIENCIES, OWNER WILL REQUEST A RE-TEST AND THE COST FOR SAME SHALL BE ALSO INCURRED BY THE GENERAL CONTRACTOR.

GENERAL MECHANICAL NOTES 1

1. FIELD VERIFY ALL EXISTING SUPPLY AND RETURN AIR DUCTWORK MAINS AND BRANCHES ARE LEAK FREE AND INSULATION IS IN GOOD CONDITION. PATCH, REPLACE AND REINSULATE AS REQUIRED FOR A PROPERLY OPERATING INSTALLED SYSTEM. REFER TO SHEET M4.0 FOR INSTALLATION DETAILS.
2. FIELD VERIFY ALL EXISTING AIR DAMPERS IN EXISTING DUCTWORK ARE IN GOOD OPERATING CONDITION. REPLACE IN-KIND AS REQUIRED.
3. EXISTING HVAC AIR TERMINAL TO REMAIN. CLEAN AIR TERMINAL TO 'LIKE NEW CONDITION'. PATCH, REINSULATE AND REATTACH EXISTING DUCT BRANCH TO AIR TERMINAL AS REQUIRED FOR A LEAK FREE AND PROPER INSTALLATION. ENSURE THAT FLEXIBLE DUCT IS PINCH FREE AND EXTENDS NO LONGER THAN A MAXIMUM LENGTH OF 5'-0". REPLACE BRANCH DUCT WITH INSULATION TO AIR TERMINAL AS REQUIRED, MATCHING EXISTING DUCT SIZE WHEN EXISTING BRANCH DUCT IS MISSING OR IN POOR CONDITION. REFER TO SHEET M4.0 FOR INSTALLATION DETAILS. PROTECT AIR TERMINAL DURING CONSTRUCTION FROM DAMAGE, DEBRIS, DUST, ETC. BALANCE TO INDICATED CFM AS INDICATED AFTER ALL OTHER HVAC WORK HAS BEEN COMPLETED.
4. 10"X10" EXHAUST AIR DUCT DOWN AND TRANSITION TO FIELD CUT EXHAUST CONNECTION AT HOOD.
5. ROUTE EXHAUST DUCT TO EXISTING ROOF PENETRATION AT EF-1. SEE HOOD DETAILS ON DRAWING M3.0. SEE DETAIL 6 ON SHEET M3.0 FOR FIRE PROTECTION OF DUCT WORK. SEE DETAIL 11 ON SHEET M4.0 FOR EXHAUST DUCT TRANSITION.
6. ROUTE NEW REFRIGERANT PIPING FROM NEW CONDENSING UNIT LOCATED ON ROOF TO NEW WALK-IN FREEZER/COOLER FAN COIL PER MANUFACTURER REQUIREMENTS.
7. CAP AND SEAL OPENING IN EXISTING DUCT CREATED BY REMOVAL OF DUCT BRANCH(S) TO EXISTING KITCHEN HOOD BEING DEMOLISHED AND REPLACED.

KEY NOTES 2

ITEM	OA	RA	SA	EA	PRESSURE
EF-1	--	--	--	1050	-1050
EF-2	--	--	--	300	-300
EF-3	--	--	--	200	-200
RTU-1	750	2250	3000	--	+750
(E)RTU-2	900	2700	3600	--	+900
TOTAL	1650	4950	6600	1500	+100

NOTE:
THE OUTSIDE PERCENTAGE OF TOTAL SUPPLY AIR IS 25% FOR RTU-1 AND (E)RTU-2.

AIR BALANCE SCHEDULE 7

MARK	AREA SERVED	FAN DATA					COOLING CAPACITY			HEATING CAPACITY				UNIT ELECT DATA			MAX UNIT WEIGHT* (LBS)	MANUFACTURER AND MODEL NUMBER	SCHEDULE NOTES
		SUPPLY CFM	MIN O.A. CFM	ESP	HP	RPM	NOM TONS	MIN CAP TOT/SEN (MBH)	EER	INPUT (MBH)	OUTPUT (MBH)	STAGES	AFUE	VOLTS/ PH	MCA	MOCP			
RTU-1	DINING	3000	750	1"	2.75	882	8.5	101.6 / 75.6	12.0	125	103	2	82	208/3	41	50	1060	CARRIER 48HCDE09	SEE NOTES 1-8

SCHEDULE NOTES:
1. LISTED CAPACITY IS THE STANDARD UNIT'S GROSS COOLING CAPACITY AT 80°F DB / 67°F WB EAT AND 95°F AMBIENT. OUTDOOR DESIGN CONDITION, SUMMER 91°F & 74°F WB, WINTER 6°F (ARI STANDARD CONDITIONS). THERMOSTAT SHALL BE PROGRAMMED FOR 73°F IN SUMMER AND 68°F IN WINTER WITH 2°F ADJ. FUNCTION UP OR DOWN. THE UNOCCUPIED TEMPERATURE SHALL BE SET TO THE STORE SCHEDULE AND 60°F MINIMUM.
2. SPECIFIED UNIT IS DOWN DISCHARGE PACKAGED GAS ROOFTOP UNIT WITH MINIMUM 2-STAGE COOLING.
3. PROVIDE WITH HINGED ACCESS PANELS, ISOLATED COMPRESSOR COMPARTMENT AND 2" PLEATED MERV 8 FILTERS.
4. PROVIDE THE SPECIFIED UNIT WITH THE FOLLOWING FIELD INSTALLED ACCESSORIES; COMBINATION COIL/HAIL GUARDS, DISCONNECT SWITCH, CIRCUIT BREAKER WITH SINGLE POINT WIRING, ECONOMIZER, OUTDOOR AIR HOOD AND UN-POWERED CONVENIENCE OUTLET.
5. PROVIDE THE SPECIFIED UNIT WITH NEW PHOTOELECTRIC TYPE SMOKE DUCT DETECTORS IN RETURN AIR SECTION TO DE-ENERGIZE THE UNIT UPON SMOKE DETECTION. INTERLOCK WITH EXISTING FIRE ALARM SYSTEM IF APPLICABLE.
6. RECONNECT TO EXISTING CONTROL WIRING CONNECTED TO EXISTING TEMPERATURE/HUMIDITY DEVICES. ENSURE THAT IDENTIFICATION LABELS ARE LISTED ON EXISTING TEMPERATURE/HUMIDITY DEVICES THAT CORRECTLY MATCH PROVIDED IDENTIFICATION LABELS ON UNITS.
7. PROVIDE HOT GAS REHEAT DEHUMIDIFICATION OPTION. HUMIDITY SENSOR TO BE MOUNTED IN THE RETURN AIR AT THE UNIT.
8. PROVIDE WEATHER-RESISTANT IDENTIFICATION LABELS ON UNIT.

* WEIGHT DOES NOT INCLUDE EXISTING CURB AND CURB ADAPTOR.

HVAC UNIT SCHEDULE 4

GPD GROUP®
Glaus, Pyle, Schomer, Burns & DeHaven, Inc.
520 South Main Street, Suite 2531
Akron, OH 44311
330.572.2100 Fax 330.572.2101

CONTRACT DATE:	05.10.21
BUILDING TYPE:	TYPE M
PLAN VERSION:	-
BRAND DESIGNER:	-
SITE NUMBER:	4320
STORE NUMBER:	2021188.16

TACO BELL

63 OHIO RIVER PLAZA
GALLIPOLIS, OH 45631

REPAIR/
MAINTENANCE
REMODEL
MECHANICAL PLAN

M1.0

HVAC GENERAL NOTES:

1. INSTALLATION SHALL CONFORM TO THE ENERGY CONSERVATION DESIGN MANUAL STANDARDS FOR COMMERCIAL BUILDINGS.
2. PROVIDE FRAMING AS REQUIRED FOR DIFFUSER/GRILLE INSTALLATION IN HARD CEILING.
3. ALL WORK AND MATERIALS SHALL COMPLY WITH GOVERNING CODES, SAFETY ORDERS AND REGULATIONS.
4. OBTAIN AND PAY FOR ALL NECESSARY PERMITS, FEES AND INSPECTIONS REQUIRED BY GOVERNING AUTHORITIES.
5. E.C. SHALL PROVIDE CONDUIT FOR LINE AND LOW VOLTAGE WIRING, LINE VOLTAGE WIRING SWITCHES, AND FINAL CONNECTIONS.
6. M.C. SHALL PROVIDE 24V CONTROL WIRING AND FINAL CONNECTIONS. ANY EQUIPMENT THAT IS SUBSTITUTED SHALL FIT IN THE SPACE PROVIDED WITH ADEQUATE ROOM FOR SERVICING, INCLUDING SUBSTITUTE EQUIPMENT NAMED IN THE SPECIFICATIONS. SUBMIT A 1/4" SCALE DRAWING OF ALL EQUIPMENT SUBSTITUTED FOR APPROVAL PRIOR TO INSTALLATION, INCLUDING, BUT NOT LIMITED TO, STRUCTURAL AND ARCHITECTURAL IMPACT, CLEARANCE REQUIREMENTS AND UTILITY REQUIREMENTS.
7. HVAC UNITS SHALL BE MOUNTED LEVEL ON ROOF CURBS.
8. ALL SUPPLY / RETURN DUCTWORK SHALL BE EXTERNALLY INSULATED.
9. ALL SUPPLY / RETURN DUCTS SHALL BE RIGID, WITH THE EXCEPTION OF THE LAST 5'-0", WHICH MAY BE FLEX.
10. SMOKE DETECTOR SHALL BE INSTALLED IN THE RETURN AIR DUCT, PRIOR TO ANY OUTSIDE AIR CONNECTIONS, AND SHALL DEACTIVATE ROOFTOP UNIT UPON SENSING SMOKE. INCLUDE SMOKE DETECTOR IN THE SUPPLY AIR DUCT ONLY IF REQUIRED BY LOCAL CODE.
11. ALL HOOD EXHAUST DUCTS SHALL BE RIGID 16 GA MINIMUM, WELDED DUCT. GRIND ALL WELDS SMOOTH. PROVIDE 3M FIRE BARRIER DUCT WRAP FOR ALL HOOD EXHAUST DUCTS.
12. ALL BRANCH DUCTS FEEDING INDIVIDUAL DIFFUSERS SHALL HAVE DAMPERS AT TAKEOFFS FOR AIR BALANCING. PROVIDE ACCESS PANELS TO DAMPERS.
13. ALL OUTSIDE AIR INTAKES SHALL BE A MINIMUM OF 10'-0" FROM EXHAUST FANS AND / OR VENTS.
14. FINAL HVAC SYSTEM TESTING AND BALANCING SHALL BE PERFORMED BY INDEPENDENT AGENT CONTRACTED DIRECTLY BY THE OWNER. A RE-TEST IS MANDATORY FOR A FALSE START (I.E. NO POWER UPON AGENT'S ARRIVAL, EQUIPMENT NOT WIRED, ETC.) AND SHALL BE A COST INCURRED BY THE G.C. IN THE EVENT A SYSTEM / STORE RECEIVES A GRADE OF 5 OR BELOW AS A RESULT OF THE HVAC SYSTEM PERFORMANCE OR OPERATIONAL DEFICIENCIES, OWNER WILL REQUEST A RE-TEST AND THE COST FOR SAME SHALL BE ALSO INCURRED BY THE GENERAL CONTRACTOR.

GENERAL MECHANICAL NOTES 1

1. REMOVE EXISTING PRIMARY AND OVERFLOW ROOF DRAIN. PROVIDE NEW COMBINATION PRIMARY AND OVERFLOW ROOF DRAIN. CONTRACTOR SHALL INSPECT EXISTING CONNECTED STORM DRAIN PIPING FOR INTEGRITY. REPLACE AS REQUIRED TO MATCH PREVIOUS INSTALLATION, MATCHING EXISTING SIZE AND MATERIAL. REFER TO PLUMBING DRAWINGS FOR MORE INFORMATION.
2. REMOVE EXISTING EXHAUST FAN, ROOF CURB, ASSOCIATED DUCTWORK AND CONNECTED KITCHEN HOOD ANSUL SYSTEM BELOW COMPLETE. PROVIDE TYPE I EXHAUST FAN AND NEW ROOF CURB IN SAME LOCATION. CONNECT 10"x10" EXHAUST DUCT FROM NEW EXHAUST HOOD BELOW. COORDINATE NEW EXHAUST DUCT ROUTING WITH EXISTING STRUCTURAL TRUSS LAYOUT.
3. REMOVE EXISTING EXHAUST FAN. PROVIDE NEW EXHAUST FAN IN SAME LOCATION, REUSING EXISTING ROOF CURB. CONNECT TO EXISTING EXHAUST AIR DUCTWORK.
4. EXISTING RTU TO REMAIN AND BE REFURBISHED TO "LIKE NEW" CONDITION BY CLEANING, LUBRICATING AND REPLACING ANY DAMAGED COMPONENTS. REBALANCE TO SUPPLY AND OUTSIDE AIRFLOW INDICATED IN AIR BALANCE SCHEDULE.
5. REMOVE EXISTING RTU. PROVIDE NEW RTU IN SAME LOCATION, REUSING EXISTING ROOF CURB. PROVIDE CURB ADAPTER TRANSITION AS NECESSARY TO MATCH EXISTING INSTALLATION. COORDINATE EXACT DUCT DROP LOCATIONS AND CONNECT TO EXISTING SA AND RA DUCTWORK. PROVIDE 1-1/4" CONDENSATE PIPING PER DETAIL 5 ON THIS SHEET.
6. EXTEND NEW 1" GAS PIPING FROM EXISTING MINIMUM 1" ON ROOF TO NEW RTU AND CONNECT AS REQUIRED. VERIFY THAT EXISTING SHUT-OFF VALVE AND DIRT LEG ARE IN ACCEPTABLE CONDITION AND OF PROPER INSTALLATION. IF NOT PROVIDE AND REPLACE AS NECESSARY. SEE DETAIL 5 THIS SHEET.
7. REMOVE EXISTING CONDENSING UNIT AND ALL ASSOCIATED REFRIGERANT PIPING. PROVIDE NEW CONDENSING UNIT IN SAME LOCATION SERVING NEW FAN COIL IN EXISTING WALK-IN COOLER / FREEZER. CONTRACTOR SHALL FIELD VERIFY EXACT REFRIGERANT REQUIREMENTS AND PROVIDE ALL NECESSARY PIPING ACCESSORIES INCLUDING, BUT NOT LIMITED TO PIPING INSULATION AND APPROPRIATE EQUIPMENT SUPPORTS FOR A COMPLETE AND OPERATIONAL REFRIGERANT SYSTEM.
8. REMOVE EXISTING MAKE UP AIR UNIT, ROOF CURB, ASSOCIATED DUCTWORK, AND CONTROLS SERVING EXISTING KITCHEN HOOD SYSTEM BELOW BEING DEMOLISHED AND REPLACED. REFER TO ARCHITECTURAL SHEETS INFILL OF PENETRATION AND NEW ROOF MEMBRANE.
9. EXISTING CONDENSING UNITS SERVING ICE MACHINES AND FROZEN BEVERAGE MACHINE TO REMAIN. PROTECT DURING CONSTRUCTION.
10. ROOF HATCH. SHOWN FOR REFERENCE ONLY.
11. EXISTING ROOF STRUCTURE. SHOWN FOR REFERENCE ONLY.
12. CONTRACTOR SHALL INSPECT EXISTING STORM DRAIN PIPING CONNECTED TO ROOF DRAIN AND OVERFLOW DRAIN FOR INTEGRITY. REPLACE AS REQUIRED.

KEY NOTES 2

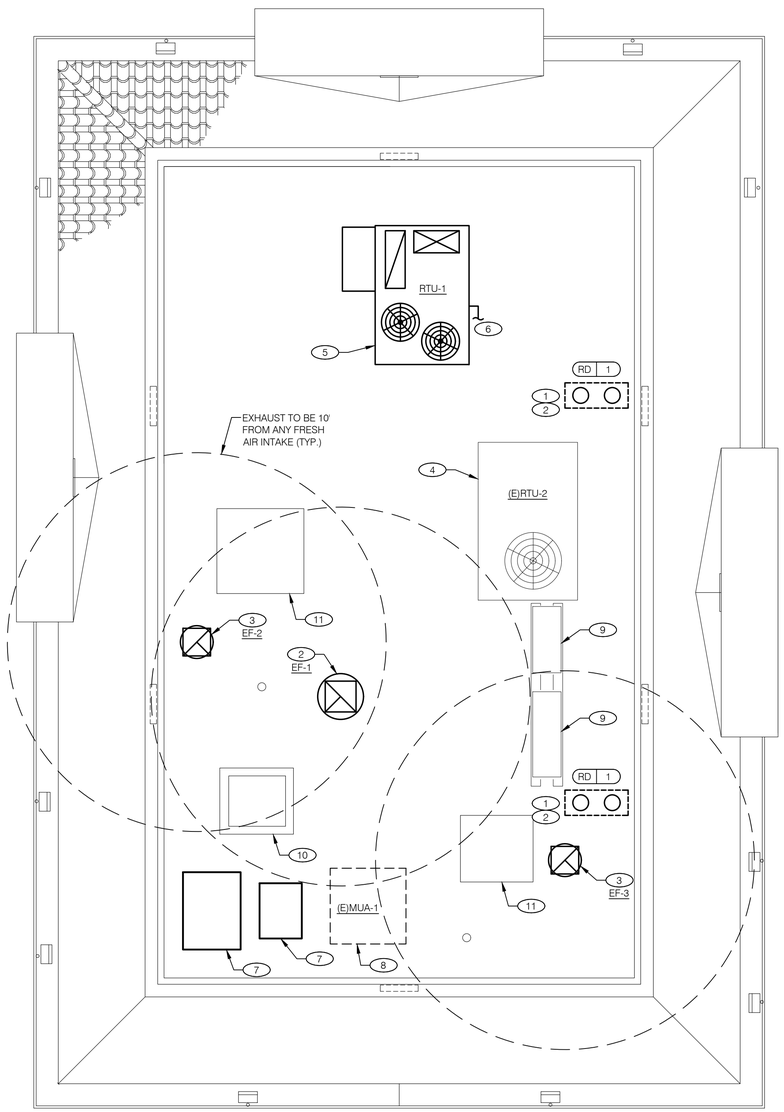

MECHANICAL ROOF PLAN 1/4" = 1'-0" 3

NOT USED 4

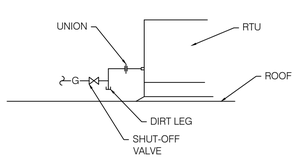

GAS PIPING CONNECTION DETAIL N.T.S. 5

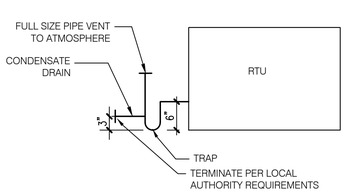

CONDENSATE DRAIN DETAIL N.T.S. 6

GPD GROUP®
Glaus, Pyle, Schomer, Burns & DeHaven, Inc.
520 South Main Street, Suite 2531
Akron, OH 44311
330.572.2100 Fax 330.572.2101

CONTRACT DATE:	05.10.21
BUILDING TYPE:	TYPE M
PLAN VERSION:	-
BRAND DESIGNER:	-
SITE NUMBER:	4320
STORE NUMBER:	2021188.16

TACO BELL

63 OHIO RIVER PLAZA
GALLIPOLIS, OH 45631

REPAIR/ MAINTENANCE REMODEL

MECHANICAL ROOF PLAN

M2.0

STRATOVENT MODEL# SVDU50HFA

TAG	HOOD	STRATOVENT MODEL #	CFM	ESP.	RPM	H.P.	B.H.P.	Ø	VOLT	FLA	MCA/MOP	WEIGHT (LBS.) FAN/CURB	SONES
EF-1	FRYER	SVDU50HFA	1050	0.9"	1429	0.50	0.33	1	115	8.4	10.5/15	86/40	14.5

SIZING NOTE: THE SELECTED FAN IS SUITABLE FOR MOST SINGLE STORY BUILDINGS. FOR LONGER DUCT RUNS, OR MULTI-STORY STRUCTURES, REQUEST A SITE ADAPT SELECTION.

SELECTED OPTIONS
- RESTAURANT MODEL
- UL762, GREASE RATED
- DIRECT DRIVEN
- SPEED CONTROLLER
- WEATHERPROOF DISCONNECT
- FLAT CURB, VENTED
- FACTORY ATTACHED HINGES

STRATOVENT
CALIFORNIA-OKLAHOMA-NORTH CAROLINA
PH: 919-573-4250
FEEDBACK@STRATOVENT.COM

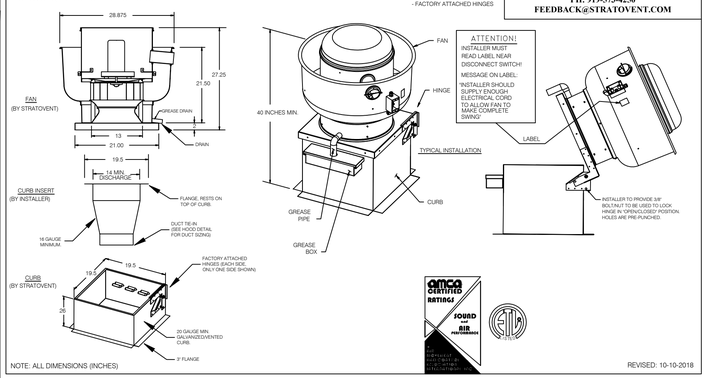

NOTE: ALL DIMENSIONS (INCHES)

REVISED: 10-10-2018

HOOD EXHAUST FAN DETAIL N.T.S. | 7

INSTALLATION: DUCT TEMPERATURE SWITCH

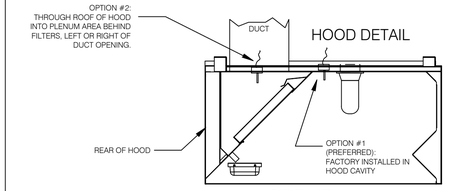

NOTE:
IF SENSOR IS FIELD INSTALLED, THE KIT SHIPS WITH UL-LISTED QUICK SEALS MUST BE USED TO SEAL ANY HOOD OR DUCT PENETRATIONS (SEE EXPLODED PARTS VIEW).

INSTALLATION: DUCT TEMPERATURE SENSOR

SENSOR DETAIL

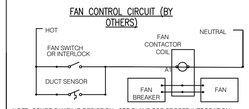

NOTE: GENERIC WIRING DEPICTION. SEE PLANS FOR PROPER INTEGRATION.

(1) NORMALLY OPEN DRY CONTACT, CLOSES ON TEMPERATURE RISE ABOVE 85F. WIRED IN PARALLEL TO NORMAL CONTROL CIRCUIT. WHEN ORDERED, SENSOR IS FACTORY INSTALLED IN HOOD CAVITY WITH J-BOX ON TOP OF THE HOOD.
(2) DO NOT USD SENSOR AS THE PRIMARY MEANS OF FAN CONTROL. USED ONLY AS A SAFETY DEVICE PER INTERNATIONAL MECHANICAL CODE TO ENERGIZE HOOD EXHAUST FAN WHEN COOKING EQUIPMENT GENERATES HEAT.
(3) FAN CONTACTOR AND CONTROLS BY OTHERS, SEE ELECTRICAL SHEETS FOR DETAILS.
(4) SEE SPECS ABOVE FOR TEMP SET POINT ADJUSTMENT

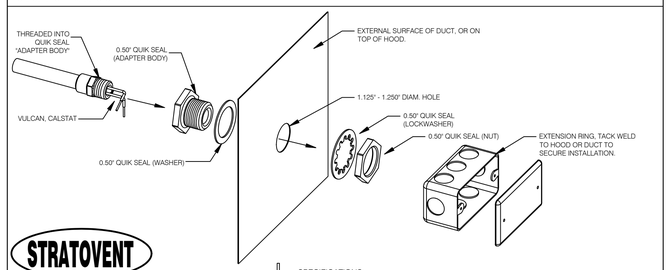

STRATOVENT

ADDITIONAL QUESTIONS??
CONTACT, STRATOVENT VENTILATION HOODS,
919-573-4250 - 251-490-6114
JEFF.JOHNSON@STRATOVENT.COM

SPECIFICATIONS:
* VULCAN CALSTAT, 1E2B9-85, NORMALLY OPEN DRY CONTACT
* SENSOR FACTORY SET AT 85F
* FIELD ADJUSTED WISET SCREW, CCW INCREASE, CW DECREASE, 90F PER REVOLUTION
* RATED FOR 10 AMPS @ 120 VAC, 5 AMPS @ 240 VAC
* SHIPPED FACTORY INSTALLED IN HOOD CAVITY

MODIFIED: 04-11-2020

HEAT SENSOR ATTACHMENT N.T.S. | 5

HOOD #	1 OF 1	MODEL #	STRATOVENT SVBD2
LENGTH (IN):	6'-3" WIDTH (IN): 36"	HEIGHT (IN):	14"H
EXHAUST CFM:	1050	SUPPLY CFM:	BY RTU-SEE M1.0
EXHAUST SP:	0.9" (HOOD+DUCT)	SUPPLY SP:	NA
EXHAUST FPM:	1512	SUPPLY FPM:	NA
EXH. SIZE:	10"X10"	SUP SIZE:	NA
FILTERS: (4)	16" X 16"	HOOD WEIGHT:	300 LBS
FIRE SUPPRESSION:	ANSUL-R102	FILTER TYPE:	STAINLESS BAFFLE
LIGHT QTY: (3)	A19/ CFL	CONTROL SWITCH:	BY OTHERS

DESIGN NOTES:
- STRATOVENT HOODS ARE ETL LISTED TO UL-710 STANDARDS, 3054804-001
- MODEL SVBD2 IS A NON-CANOPY HOOD, "LISTED" VALUES ARE UTILIZED FOR AIRFLOW, OVERHANGS AND TEMPERATURE RATINGS.
- 18/20 GAUGE MINIMUM S/S ON EXPOSED SURFACES PER NFPA.
- HOOD IS PRE-PIPED FOR ANSUL R102, FIELD HOOKUP BY OTHERS
- INSTALLER TO REVIEW ELECTRICAL SHEETS FOR HOOD AND FAN WIRING. STRATOVENT DOES NOT PROVIDE A CONTROL BOX IN THE "BASE" PACKAGE.

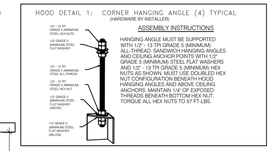

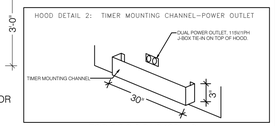

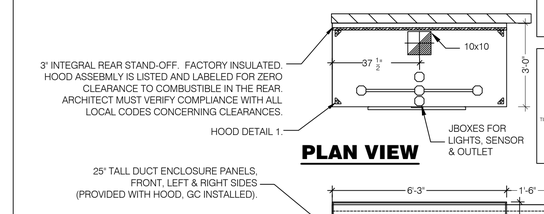

PLAN VIEW

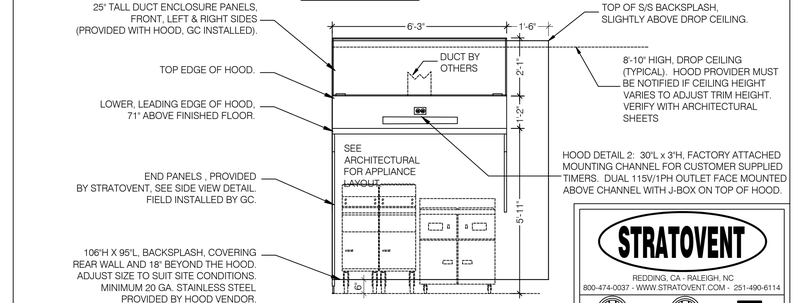

FRONT VIEW

UPDATED: 6FT-3IN LONG VERSION, 04-11-2020

STRATOVENT
REDDING, CA - RALEIGH, NC
800-474-0037 - WWW.STRATOVENT.COM - 251-490-6114
(UL/ULC-710 Standard) (NSF/ANSI Standard 2)
ETL-LISTED FILE #3054804-001 / TESTED TO UL-710

TACO BELL HOOD DETAIL N.T.S. | 2

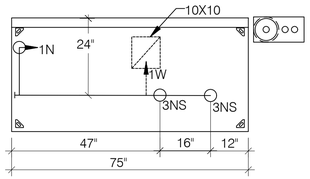

PLAN VIEW

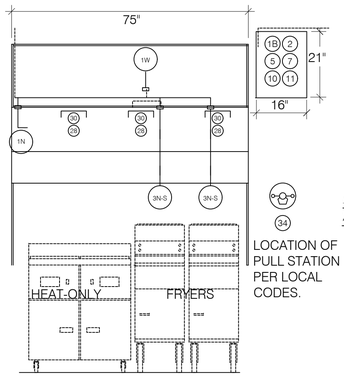

LOCATION OF PULL STATION PER LOCAL CODES.

FRONT VIEW

PROJECT: TACO BELL

System Size: ANSUL-3.0 Gallons Total, R102
Flow Points: 8 Design, 11 (max)

Hood #1: 6'-3" L x 36" W x 14" H
Exhaust Riser Size: 10" x 10"

NOTES
- FIELD PIPE DROPS AS SHOWN: SLEEVING, ELBOWS, TEES, AND NOZZLES SUPPLIED BY STRATOVENT FOR HOOD-BASED PIPING.
- RELOCATE NOZZLES IF FLOW PATTERN IS BLOCKED.
- MAXIMUM 9 ELBOWS IN SUPPLY LINE, MINIMUM 72 INCHES OF AGENT LINE FROM TANK TO FIRST NOZZLE.
- ALL NOZZLE HEIGHT AND PLACEMENT TO BE DETERMINED BY INSTALLER AND AHJ PER ANSUL GUIDELINES.
- ALL PIPING TO BE 3/8" SCH 40 BLACK IRON.
- THIS FIRE SYSTEM COMPLIES WITH U.L. 300 REQUIREMENTS.
- SYSTEM INSTALLATION AND FINAL HOOKUP SOURCED BY GEN CONTRACTOR. SYSTEM PARTS OPTIONALLY PURCHASED FROM STRATOVENT BY OWNER OR G.C..

LEGEND – WALL MOUNTED ANSUL SYSTEM

1B	3.0 GALLON TANK
2	AUTOMAN RELEASE
5	ANSULEX LIQUID AGENT (3.0 GAL.)
7	CARTRIDGE (101-20)
10	TEST LINK
11	DOUBLE MICROSWITCH
1W	NOZZLE ASSEMBLY (419336)
1N	NOZZLE ASSEMBLY (419335)
3N	NOZZLE ASSEMBLY (419338)
28	DETECTOR BRACKET
30	HIGH TEMP FUSIBLE LINK
MGV	MECHANICAL GAS VALVE
34	REMOTE MANUAL PULL STATION
S	SWIVEL ADAPTOR

DESIGN NOTE:
1) ABOVE DEPICTION SHOWS DUAL FRYERS ON RIGHT END OF THE HOOD. HOOD SUPPLIER WILL VERIFY EQUIP LAYOUT PER PLANS AND PLACE FRYER NOZZLES ON THE LEFT END WHEN APPROPRIATE TO SUIT SITE CONDITIONS

TACO BELL HOOD FIRE SUPPRESSION SYSTEM PLAN N.T.S. | 6

Hoods shall be constructed of minimum 20 gauge stainless steel with # 3 polish. All unexposed surfaces shall be constructed of minimum 18 gauge aluminized steel.

UL classified aluminum or stainless steel baffle-type filters shall be easily removed for cleaning. Filter housing shall terminate in a pitched grease trough that drains into a removable stainless steel grease cup.

UL listed and NSF approved vapor proof incandescent light fixtures pre-wired to junction box at top of hood in accordance with NEC 70.

Pre-piped fire suppression systems shall be located on the top of the hood and provided with the hood or by a certified technician. Final location of all nozzles and fire suppression drops to be locally approved and inspected.

Hood(s) shall be fabricated in accordance with NFPA Bulletin #96 and shall bear the NSF Seal of Approval. Hoods shall be listed under UL 710 EXHAUST HOODS FOR COMMERCIAL COOKING EQUIPMENT, Certified by ETL under FILE# 3054804-001.

5. Hood(s) shall be fabricated in accordance with NFPA Bulletin #96 and shall bear the NSF Seal of Approval. Hoods shall be listed under UL 710 EXHAUST HOODS FOR COMMERCIAL COOKING EQUIPMENT, Certified by ETL under FILE# 3054804-001.

LISTED
NAPA INTERNATIONAL

THIS HOOD DESIGN IS BASED UPON STRATOVENT, MODEL SVND2. MANUFACTURED BY:

STRATOVENT VENTILATION HOODS
RALEIGH, NC 27616
CONTACT: JEFF JOHNSON, 251-490-6114

HOOD NOTES AND SPECS (TYP.) N.T.S. | 4

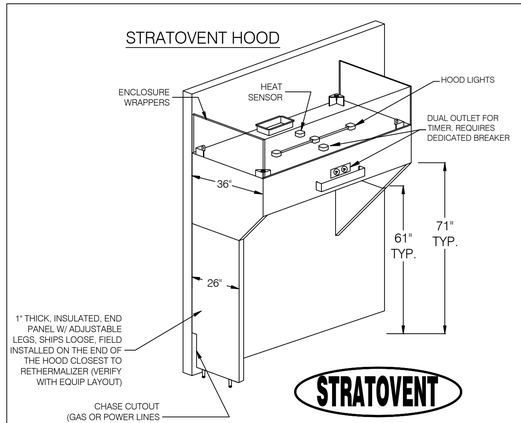

STRATOVENT

STRATOVENT-BRAND HOODS ARE CERTIFIED BY ETL-INTERTEK TO NATIONALLY RECOGNIZED UL-710 AND NSF STANDARDS.

LISTED

CONTACT US:
WWW.STRATOVENT.COM
919-573-4250
FEEDBACK@STRATOVENT.COM

HOOD ISOMETRIC N.T.S. | 3

LOW-PROFILE HOOD

HOOD #1

STRATOVENT HOODS BUILT IN COMPLIANCE WITH
NFPA #96
NSF STANDARD #2
UL STANDARD 710
ETL FILE NO. 3054804-001

NON-CANOPY HOOD DESIGN BASED ON:

MANUFACTURER: STRATOVENT, MODEL SVBD2
ETL LISTED UL/ULC-710, ULC-S646: # 3054804-001
MIN. "LISTED" AIRFLOW: 150 CFM PER LINEAR FT
DESIGN AIRFLOW: 168 CFM PER LINEAR FT
MAX. DIST. ABOVE COOK SURFACE: 47"
MAX. COOK SURFACE FRONT UNDERHANG: - 3"
MIN. SIDE COOK SURFACE OVERHANG: 0"
MAX. APPLIANCE COOKING TEMPERATURE: 450 F

HOOD DESIGN QUESTIONS?
STRATOVENT KITCHEN VENTILATION
PHONE: 251.490.6114
JEFF.JOHNSON@STRATOVENT.COM

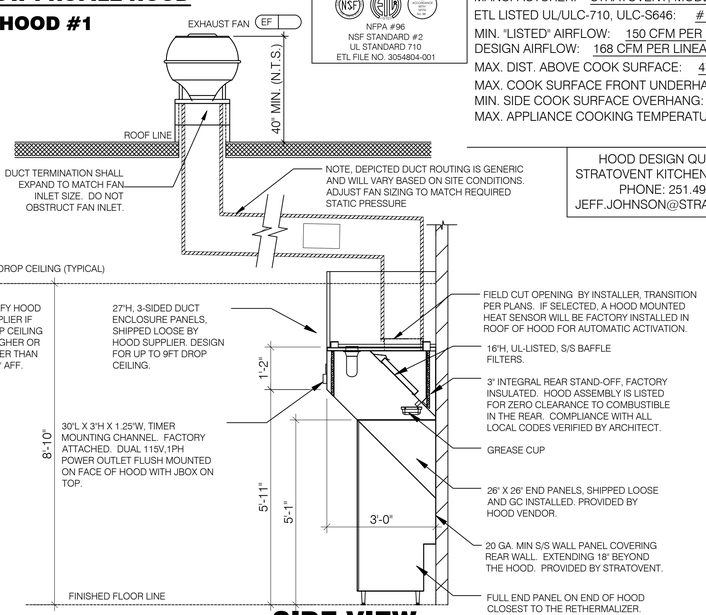

SIDE VIEW

UPDATED: 6FT-3IN LONG VERSION, 04-11-2020

TACO BELL HOOD SECTION N.T.S. | 1

FOR REFERENCE ONLY

CONTRACT DATE:	05.10.21
BUILDING TYPE:	TYPE M
PLAN VERSION:	-
BRAND DESIGNER:	-
SITE NUMBER:	4320
STORE NUMBER:	2021188.16

TACO BELL
63 OHIO RIVER PLAZA
GALLIPOLIS, OH 45631

REPAIR/ MAINTENANCE REMODEL

HOOD DETAILS AND SECTIONS

M3.0

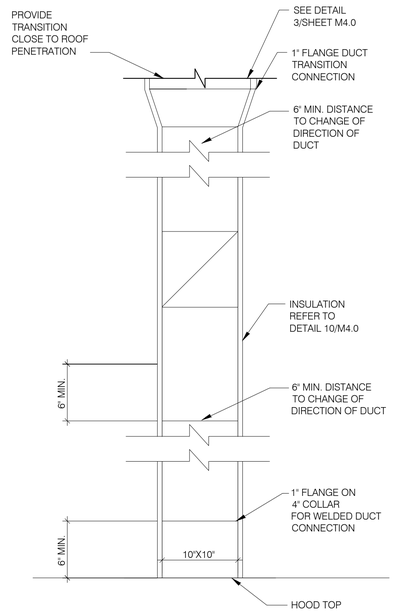

TB HOOD DUCT TRANSITION N.T.S. **11**

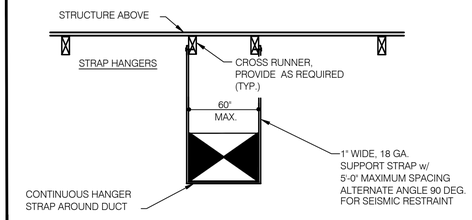

RECTANGULAR DUCT SUPPORT DETAIL N.T.S. **8**

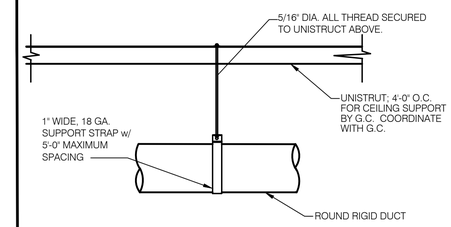

ROUND DUCT SUPPORT DETAIL N.T.S. **6**

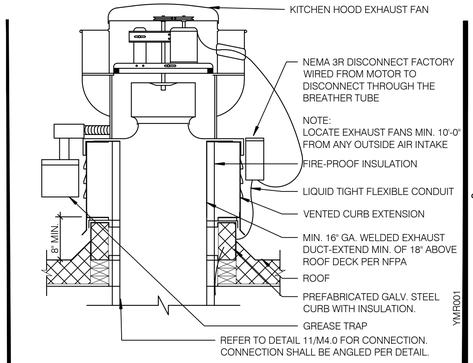

EXHAUST FAN (EF-1) N.T.S. **3**

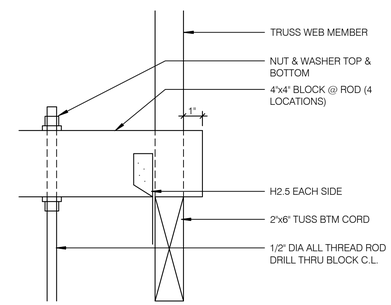

ROD ATTACHMENT N.T.S. **7**

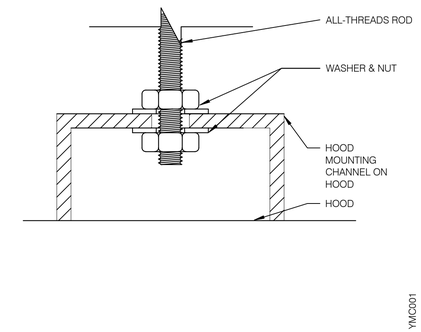

BOLT CONNECTION TO HOOD N.T.S. **5**

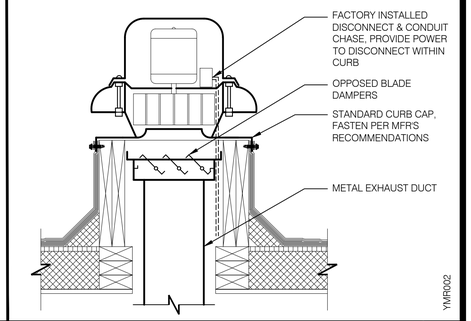

EXHAUST FAN (EF-2), (EF-3) N.T.S. **2**

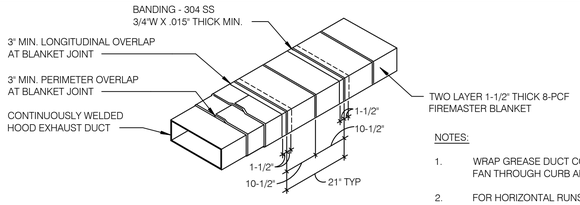

BANDING REQUIREMENTS: USE 304 STAINLESS STEEL BANDS A MAXIMUM 1-1/2" FROM BLANKET EDGE AND SPACED A MAXIMUM OF 10-1/2" ON CENTER.

NOTES:

1. WRAP GREASE DUCT CONTINUOUS AS SHOWN FROM CONNECTION AT FAN THROUGH CURB AND EXTEND 18" MIN. BELOW ROOF DECK.
2. FOR HORIZONTAL RUNS OF EXHAUST DUCTS PROVIDE TYPICAL TRAPEZE SUPPORT SYSTEM WITH 1/2" HANGER RODS A MAXIMUM OF 6" FROM INSULATION EDGE. TRAPEZE SUPPORTS SHALL BE SPACED A MAXIMUM OF 60" ON CENTER FROM CENTERLINE OF VERTICAL EXHAUST DUCT.
3. SLOPE HORIZONTAL EXHAUST DUCT RUNS A MINIMUM OF 1/4" PER FOOT (2% SLOPE) TOWARDS EXHAUST HOOD.
4. PROVIDE INSULATED ACCESS DOOR OR PANEL NEAR MID POINT OF EXHAUST DUCT RUN FOR CLEANING AND INSPECTION OF DUCT. PROVIDE AN APPROVED SIGN ON ACCESS DOOR OR PANEL WHICH READS "ACCESS PANEL DO NOT OBSTRUCT."

KITCHEN HOOD EXHAUST DUCT SYSTEM DETAIL N.T.S. **10**

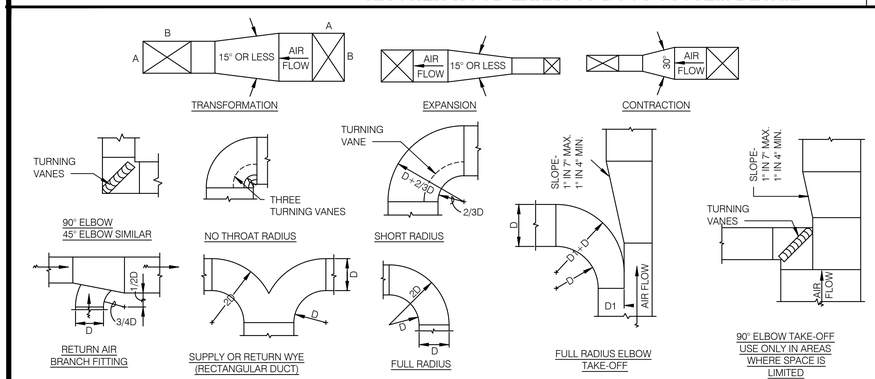

TYPICAL DUCTWORK DETAILS N.T.S. **9**

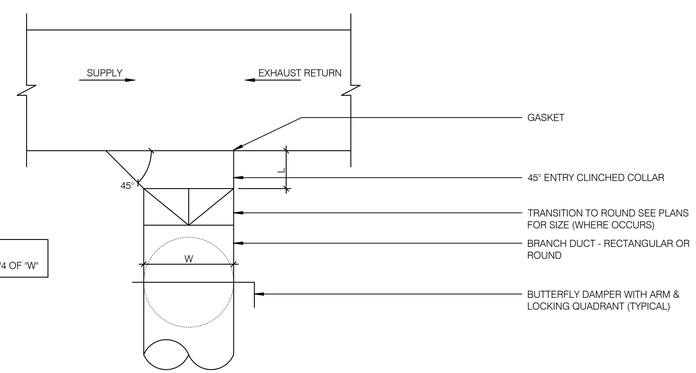

NOTE:
L = 4" MIN. OR 1/4 OF "W"

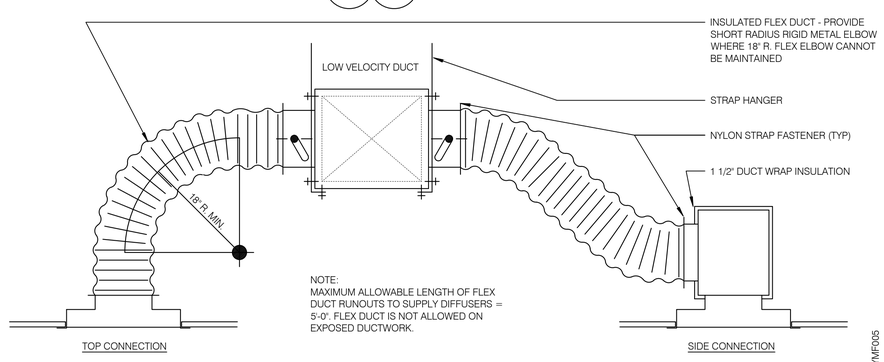

NOTE:
MAXIMUM ALLOWABLE LENGTH OF FLEX DUCT RUNOUTS TO SUPPLY DIFFUSERS = 5'-0". FLEX DUCT IS NOT ALLOWED ON EXPOSED DUCTWORK.

CEILING DIFFUSER CONNECTIONS N.T.S. **4**

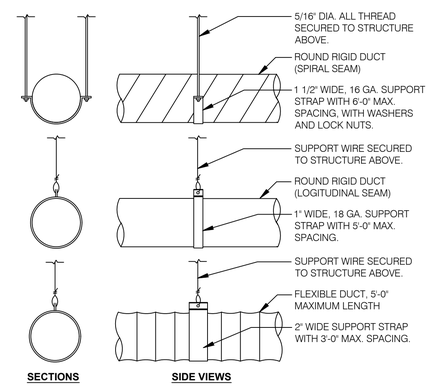

DUCT SUPPORT DETAIL N.T.S. **1**

GPD GROUP®
Glaus, Pyle, Schomer, Burns & DeHaven, Inc.
520 South Main Street, Suite 2531
Akron, OH 44311
330.572.2100 Fax 330.572.2101

CONTRACT DATE:	05.10.21
BUILDING TYPE:	TYPE M
PLAN VERSION:	-
BRAND DESIGNER:	-
SITE NUMBER:	4320
STORE NUMBER:	2021188.16

TACO BELL

63 OHIO RIVER PLAZA
GALLIPOLIS, OH 45631

TACO BELL

REPAIR/ MAINTENANCE REMODEL
MECHANICAL DETAILS

M4.0

SYMBOLS	ABBREV.	DESCRIPTION
	V.T.R.	VENT THRU ROOF
	V.B.F.	VENT BELOW FLOOR
	(E)	EXISTING
	F.D.	FLOOR DRAIN
	H.D.	HUB DRAIN
	F.S.	FLOOR SINK
	A.F.F.	ABOVE FINISHED FLOOR
X-X 0000		PLUMBING EQUIPMENT DESIGNATION
XXX		KITCHEN EQUIPMENT NUMBER: REFER TO KITCHEN EQUIP. DRAWINGS FOR DESCRIPTION.
	SS	SANITARY
	GW	GREASE WASTE
G	G	GAS PIPE
	CW	COLD WATER
	HW	HOT WATER
	HWR	HOT WATER RETURN
	V	SANITARY VENT
CD	C.D.	CONDENSATE DRAIN
	F.C.O.	FLOOR CLEANOUT OR CLEANOUT TO GRADE
	W.C.O.	WALL CLEANOUT
FW	FW	FILTERED WATER
TW	TW	TEMPERED WATER
	H.B.	HOSE BIBB
	S.O.V.	SHUT-OFF VALVE
	C.V.	CHECK VALVE
	B.V.	BALANCE VALVE
	FU	FIXTURE UNIT
	P.O.C.	POINT OF CONNECTION

PLUMBING LEGEND 4

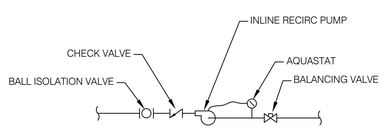

RECIRCULATION PUMP DETAIL 5

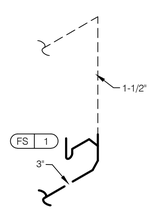

TYPICAL FLOOR SINK

PLUMBING WASTE ISOMETRIC N.T.S. 6

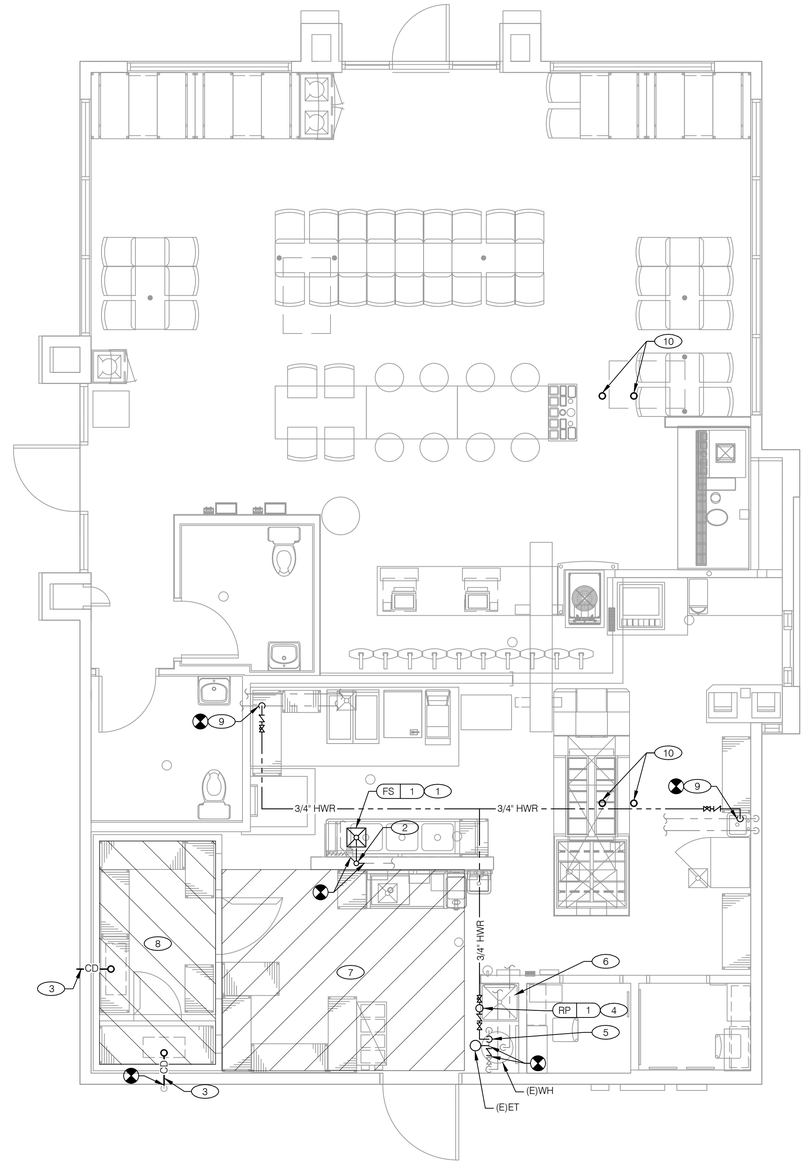

PLUMBING PLAN 1/4"=1'-0" 3

ITEM	FIXTURE	SOIL OR WASTE	VENT	COLD WATER	HOT WATER	TEMP'D WATER	WASTE FU	WATER FU	DESCRIPTION	MANUFACTURER / MODEL NUMBER
FS 1	FLOOR SINK	3"	1-1/2"	--	--	--	6	--	LIGHT DUTY, ACID RESISTANCE, WHITE PVC FLOOR SINK W/ 12" SQUARE WHITE PVC HALF GRATE AND STAINLESS STEEL DEBRIS BUCKET WITH LIFTING HANDEL.	SIOUX CHIEF / MODEL: 861-4PNDW
RD 1	ROOF DRAIN	4"	-	--	--	--	--	--	LIGHT DUTY, ACID RESISTANCE, WHITE PVC FLOOR SINK W/ 12" SQUARE WHITE PVC HALF 12" DIAMETER COMBINATION MAIN ROOF AND OVERFLOW DRAIN, CAST IRON BODIES WITH COMBINATION MEMBRANE FLASHING CLAMP/GRAVEL GUARDS, DECK PLATE, CAST IRON DOME, AND 4" NO-HUB OUTLET.	ZURN Z164
RP 1	RECIRC PUMP	--	--	--	1/2"	--	--	--	5 GPM AT 9.5 FEET HEAD, PROVIDE WITH CHECK VALVE, BALANCE VALVE, AND AQUASTAT.	TACO 009

PLUMBING FIXTURE SCHEDULE 4

PLUMBING GENERAL NOTES

1. SOIL AND WASTE PIPE SHALL SLOPE 2% MINIMUM, UNLESS OTHERWISE NOTED OR REQUIRED BY CODE.
2. ALL VALVES, SHOCK ARRESTORS OR OTHER EQUIPMENT SHOWN IN WALLS OR ABOVE NON-ACCESSIBLE CEILING SHALL BE INSTALLED BEHIND AN ACCESS PANEL.
3. PRIOR TO COMMENCING WORK ON THIS PROJECT, CONTRACTOR SHALL VERIFY DEPTH, SIZE, LOCATION AND CONDITION OF ALL EXISTING UTILITIES IN FIELD BEFORE STARTING WORK. SHOULD CONDITIONS EXIST OTHER THAN THOSE INDICATED WHICH WOULD CAUSE THE DESIGN TO BE ALTERED, CONTRACTOR SHALL NOTIFY OWNER IMMEDIATELY.
4. CONTRACTOR SHALL COORDINATE INSTALLATION OF PLUMBING WORK WITH ALL OTHER TRADES SO AS TO AVOID UNNECESSARY DELAY OR INTERFERENCES. CONTRACTOR TO REVIEW ARCHITECTURAL AND EQUIPMENT SHEETS.
5. ALL PLUMBING WORK AND MATERIALS SHALL BE INSTALLED IN ACCORDANCE WITH ALL APPLICABLE STATE & LOCAL ORDINANCES & REGULATIONS HAVING JURISDICTION. CONTRACTOR SHALL OBTAIN ALL APPROVALS REQUIRED FROM REGULATING AGENCIES BEFORE STARTING WORK. ALL PLUMBING WORK & MATERIALS SHALL MEET THE REQUIREMENTS OF THE LATEST EDITIONS OF THE LOCAL PLUMBING CODE, UNLESS OTHERWISE REQUIRED BY THE DEPARTMENT OF BUILDING SAFETY. OBTAIN & PAY FOR ALL PERMITS, FEES & INSPECTIONS REQUIRED BY GOVERNING AUTHORITIES. ALL PIPING TO BE CONCEALED UNLESS NOTED OTHERWISE.
6. THE EQUIPMENT ROUGH-INS AS SHOWN ARE BASED UPON AVAILABLE INFORMATION. HOWEVER, IN SOME INSTANCES, THE OWNER OR SUPPLIER MAY SUBSTITUTE OR THE EQUIPMENT ITEM MAY VARY FROM WHAT IS SHOWN, THEREFORE, THE CONTRACTOR SHALL VERIFY ALL CRITICAL DIMENSIONS WITH THE OWNER PRIOR TO CONSTRUCTION. FAILURE OF THE CONTRACTOR TO VERIFY THESE DIMENSIONS SHALL PLACE THE RESPONSIBILITY FOR ANY SUBSEQUENT RELOCATION DIRECTLY ON THE CONTRACTOR.
7. ALL NEW WATER DISTRIBUTION PIPING SHALL BE COPPER, TYPE "L" MINIMUM.
8. EXISTING FIRE PROTECTION PIPING AND EQUIPMENT TO REMAIN. CONTRACTOR TO CLEAN AND SERVICE TO LIKE NEW CONDITION.
9. SCOPE WITH CAMERA AND JET EXISTING SANITARY AND GREASE WASTE PIPING SYSTEMS TO ENSURE GOOD CONDITION AND CLEAR ANY OBSTRUCTIONS TO FLOW.
10. REFER TO STRUCTURAL DETAIL 1 ON SHEET S4.0 FOR TYPICAL SLAB TRENCHING DETAIL WHERE EXISTING SLAB-ON-GRADE IS TO BE REMOVED AND REPLACED FOR INSTALLATION OF NEW UNDERGROUND UTILITIES

FIRE PROTECTION SUB-CONTRACTOR/DESIGNER:

1. A LICENSED FIRE SPRINKLER CONTRACTOR IS REQUIRED FOR ALL WORK PERFORMED ON THE EXISTING FIRE SPRINKLER SYSTEM. CONTRACTOR IS RESPONSIBLE TO PAY FOR ALL FEES AND INSPECTIONS.
2. FIRE PROTECTION SERVICE SHALL ONLY BE LEFT UNATTENDED WHEN IN SERVICE.
3. EXISTING FIRE PROTECTION PIPING AND EQUIPMENT TO REMAIN. CONTRACTOR TO CLEAN AND SERVICE TO LIKE NEW CONDITION.
4. VERIFY INCOMING FIRE WATER SERVICE, BACK FLOW PREVENTERS AND CONTROL VALVES ARE IN GOOD WORKING ORDER.
5. ALL NEW SPRINKLER HEADS SHALL CONFORM TO NFPA-13.

GENERAL PLUMBING NOTES 1

1. REMOVE AND REPLACE EXISTING DIRECT WASTE CONNECTION FROM EXISTING 3-COMPARTMENT SINK WITH AN INDIRECT WASTE CONNECTION TO NEW FLOOR SINK WITH AIR GAP PER CODE.
2. 3" GREASE WASTE UP AND 1-1/2" VENT DOWN TO NEW FLOOR SINK. EXTEND PIPING AND CONNECT TO EXISTING MINIMUM 3" GREASE WASTE AND 1-1/2" VENT PIPE. FIELD VERIFY EXACT LOCATION, INVERT DEPTH AND SIZE PRIOR TO THE START OF WORK.
3. REMOVE EXISTING CONDENSATE PIPING FROM EXISTING WALK-IN COOLER & FREEZER EVAPORATOR FAN COILS BEING REPLACED AND INSTALL AND INSULATE 3/4" COPPER CONDENSATE PIPING SUPPLIED BY VENDOR FROM WALK-IN COOLER & FREEZER EVAPORATOR FAN COILS TO OUTSIDE OF EXTERIOR WALL MATCHING PERVIOUS INSTALLATION. TERMINATE AT GRADE IN LANDSCAPE AREA. SEAL WALL PENETRATIONS WEATHER TIGHT. HEAT TRACE SHALL BE PROVIDED WITH FREEZER CONDENSATE.
4. PROVIDE NEW HOT WATER RECIRC PUMP. CONTRACTOR SHALL PROVIDE CONTROLS THAT START PUMP BASED ON THE IDENTIFICATION OF DEMAND FOR HOT WATER WITHIN THE OCCUPANCY. THE CONTROLS SHALL AUTOMATICALLY TURN THE PUMP OFF WHEN THE WATER IN THE CIRCULATION PUMP IS AT THE DESIRED TEMPERATURE AND WHEN THERE IS NO DEMAND FOR HOT WATER PER OECC. SEE RECIRCULATION PUMP DETAIL THIS SHEET.
5. TIE NEW 3/4" DOMESTIC HOT WATER RECIRC PIPING INTO EXISTING DOMESTIC COLD WATER PIPING SERVING WATER HEATER. INSTALL NEW CHECK VALVE BETWEEN DOMESTIC HOT WATER TIE IN AND EXISTING SHUT-OFF VALVE. REWORK EXPANSION TANK TO TIE INTO DOMESTIC COLD BETWEEN NEW CHECK VALVE AND DOMESTIC HOT WATER RECIRC TIE IN.
6. CONTRACTOR SHALL REWORK REDUCED ZONE BACKFLOW PREVENTER RELIEF DRAIN PIPING AS REQUIRED TO DISCHARGE PROPERLY TO EXISTING MOP SINK. FIELD VERIFY EXACT LOCATION PRIOR TO WORK.
7. REPLACE EXISTING FIRE SPRINKLER HEADS IN KIND MATCHING EXISTING TEMPERATURE RATINGS AND PREVIOUS INSTALLATION TYPE. FIELD VERIFY EXACT LOCATION PRIOR TO WORK.
8. REPLACE EXISTING FIRE SPRINKLER HEADS WITH NEW DRY TYPE HEADS MATCHING EXISTING TEMPERATURE RATINGS AND PREVIOUS INSTALLATION TYPE. FIELD VERIFY EXACT LOCATION PRIOR TO WORK.
9. TIE NEW 3/4" DOMESTIC HOT WATER RECIRC PIPING INTO EXISTING DOMESTIC HOT WATER PIPING WITH CHECK VALVE AND BALANCE VALVE AS INDICATED.
10. CONTRACTOR SHALL INSPECT PRIMARY AND OVERFLOW STORM DRAIN PIPING LEADERS IN CEILING SPACE AND DOWN IN WALLS THAT ARE CONNECTED TO ROOF DRAINS ON ROOF ABOVE FOR INTEGRITY. REPLACE PIPING AS REQUIRED TO MATCH PREVIOUS INSTALLATION, MATCHING EXISTING SIZE AND MATERIAL FOR A WATERTIGHT SYSTEM. REFER TO MECHANICAL ROOF PLAN FOR MORE INFORMATION.

KEY NOTES 2

GPD GROUP®
Glaus, Pyle, Schomer, Burns & DeHaven, Inc.
520 South Main Street, Suite 2531
Akron, OH 44311
330.572.2100 Fax 330.572.2101

CONTRACT DATE:	05.10.21
BUILDING TYPE:	TYPE M
PLAN VERSION:	-
BRAND DESIGNER:	-
SITE NUMBER:	4320
STORE NUMBER:	2021188.16

TACO BELL

63 OHIO RIVER PLAZA
GALLIPOLIS, OH 45631

REPAIR/
MAINTENANCE
REMODEL
PLUMBING PLAN & SCHEDULE

P1.0

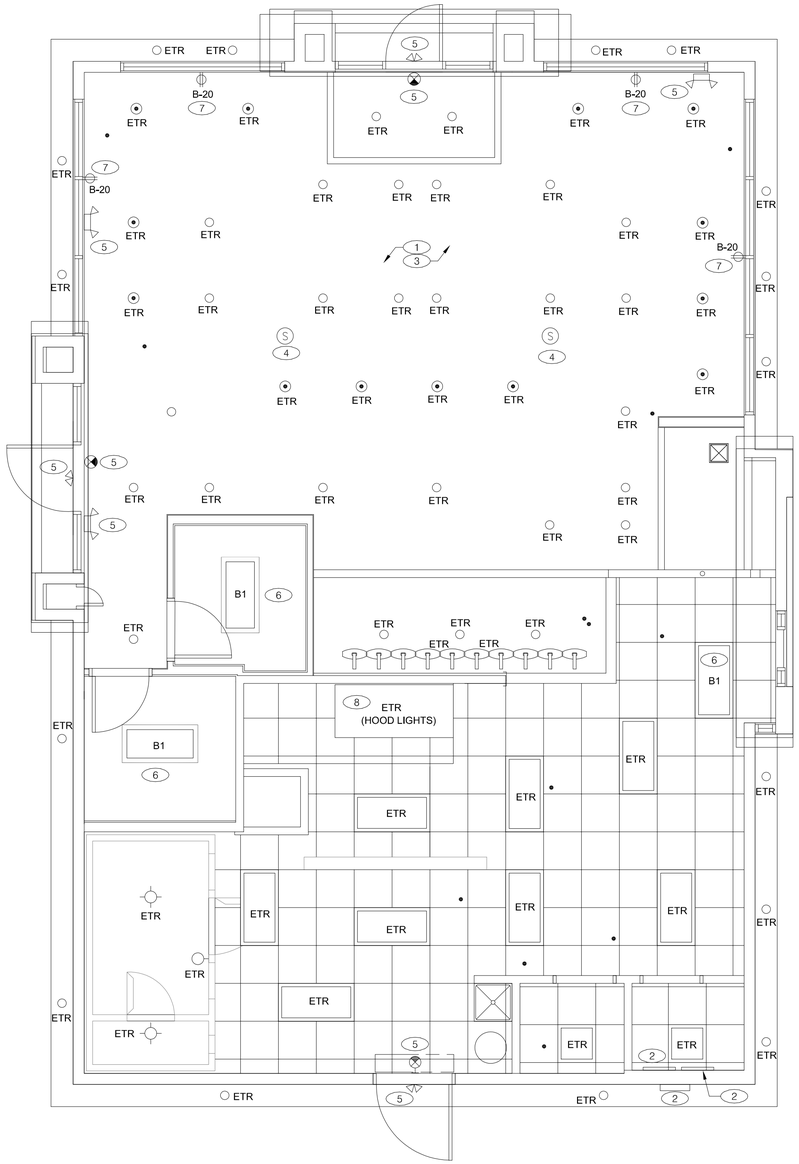

LIGHTING PLAN 1/4"= 1'-0" **A**

GENERAL SCOPE

1. NEW LIGHTING FIXTURES IN RESTROOMS AND (1) ONE LIGHTING FIXTURE IN B.O.H.

GENERAL NOTES

A. CONFIRM LIGHTING FIXTURE QUANTITIES WITH SUPPLIER.

B. EMERGENCY AND NIGHT LIGHTING MARKED WITH 'NL' SUBSCRIPT SHALL OPERATE CONTINUOUSLY. PROVIDE UNSWITCHED HOT TO NIGHT AND EMERGENCY DRIVER.

C. EMERGENCY LIGHTING NOT MARKED WITH 'NL' SUBSCRIPT SHALL OPERATE UNDER CONTROL OF EXISTING LIGHTING SWITCHES. PROVIDE UNSWITCHED CONSTANT HOT TO EMERGENCY DRIVER AND SWITCHED HOT TO NORMAL DRIVER.

D. CONTRACTOR SHALL FIELD VERIFY CEILING TYPE AND PROVIDE PROPER MOUNTING HARDWARE.

E. ALL FIXTURES SUPPLIED WITH LAMPS.

F. ALL INTERIOR LIGHTING CIRCUITS TO BE WIRED THRU THE LIGHTING CONTROL RELAYS.
DOWNLIGHTS IN BLACK DROPPED CEILING SHALL HAVE BLACK TRIM RINGS.

G. PENDANT LIGHTS SHALL BE CENTERED OVER TABLES. VERIFY TABLE LOCATIONS WITH SEATING VENDOR SUPPLIED CORE DRILL PLAN PRIOR TO LOCATING PENDANTS.

H. DOWNLIGHTS IN BLACK DROPPED CEILING SHALL HAVE BLACK TRIM RINGS.

I. ETR - EXISTING TO REMAIN

J. E.C. SHALL LABEL ALL PANELS AND ASSOCIATED EQUIPMENT AND PROVIDE A NEW PANEL SCHEDULE INDEX FOR EACH PANEL IDENTIFYING ALL CIRCUITS ONCE WORK HAS BEEN COMPLETED. PER NEC 408.4

K. TYPE MC CABLE SHALL BE PERMITTED TO BE USED IN EXPOSED AND CONCEALED LOCATIONS ONLY WHERE NECESSARY TO FISH THROUGH EXISTING PARTITIONS. OR WHERE USE OF EMT OR IMC IS NOT FEASIBLE. AND SHALL TERMINATE INTO AN APPROVED METAL RACEWAY SYSTEM OR JUNCTION BOX WITHIN 3 FEET OF EXPOSURE.

CONTRACTOR IS RESPONSIBLE FOR LOADING ON ALL PANELS AND FEEDERS PER THE N.E.C. CONTRACTOR SHALL KEEP CIRCUIT CONTINUITY TO DEVICES TO REMAIN. E.C. SHALL VERIFY THAT ALL LOADS PLACED ON EXISTING PANELS AND FEEDERS DO NOT EXCEED THE MAXIMUM LOADING REQUIREMENT PER THE LATEST EDITION OF THE NEC. NOTIFY A/E IF OVERLOAD IS POSSIBLE.

GENERAL NOTES/LOADING NOTE **C**

1. E.C. SHALL CLEAN AND REPAIR EXISTING LIGHTING FIXTURES AS REQUIRED.
2. NEW ELECTRICAL BRANCH PANELS AND MDP SHALL REPLACE EXISTING PANELS AND MDP AND SHALL BE INSTALLED IN EXISTING SPACE. PROVIDE UPDATED TYPED PANEL SCHEDULE. REFER TO ONE LINE DIAGRAM FOR ADDITIONAL INFORMATION.
3. EXISTING SMOKE DETECTORS TO REMAIN. CLEAN AND REPAIR AS NECESSARY FOR CONTINUED OPERATION.
4. EXISTING SPEAKERS TO REMAIN. CLEAN AND REPAIR AS NECESSARY.
5. ALL EXISTING EMERGENCY EXIT LIGHTING AND EXIT SIGNS TO REMAIN UNLESS OTHERWISE NOTED. E.C. SHALL FIELD VERIFY EXACT LOCATION OF EXISTING EMERGENCY LIGHTING AND VERIFY ALL ARE OPERATIONAL. E.C SHALL REPAIR OR REPLACE AS REQUIRED.
6. NEW LIGHTING FIXTURE. E.C. SHALL CONNECT NEW FIXTURE TO NORMAL LIGHTING CIRCUIT FEEDING THAT AREA. E.C. SHALL ENSURE NO OVERLOADS SHALL OCCUR. COORDINATE EXACT LOCATIONS, LIGHTING FIXTURE CONTROL, AND OTHER REQUIREMENTS WITH LIGHTING FIXTURE VENDOR AND CONSTRUCTION SUPERVISOR PRIOR TO ROUGH-IN.
7. EC SHALL INSTALL SHOW WINDOW RECEPTACLE IF NONE ARE PRESENT. EC SHALL PROVIDE (1) 20A, 120V CIRCUIT BACK TO SPARE CIRCUIT IN EXISTING PANELBOARD. IF SPACE ONLY EXISTS, PROVIDE NEW CIRCUIT BREAKER TO MATCH TYPE AND RATING OF EXISTING BREAKERS.
8. HOOD LIGHTING BY MANUFACTURER. COORDINATE EXACT REQUIREMENTS WITH CONSTRUCTION SUPERVISOR PRIOR TO CONNECTIONS.

KEY NOTES **D**

NO.	QTY	LOCATION	MFR / CATALOG NUMBER	DESCRIPTION	LAMP		BALLAST	MOUNTING		VOLT	WATT	REMARKS
					#	TYPE	TYPE	TYPE	HT.			
B1	3	KITCHEN & R.R.'s	MAXLITE MLFP-24DE-45-41	2x4 LED FLAT PANEL	-	LED		RECESSED GRID		120	45	-

ETR = EXISTING TO REMAIN

LIGHTING FIXTURE SCHEDULE **B**

GPD GROUP®
Glaus, Pyle, Schomer, Burns & DeHaven, Inc.
520 South Main Street, Suite 2531
Akron, OH 44311
330.572.2100 Fax 330.572.2101

CONTRACT DATE:	05.10.21
BUILDING TYPE:	TYPE M
PLAN VERSION:	-
BRAND DESIGNER:	-
SITE NUMBER:	4320
STORE NUMBER:	2021188.16

TACO BELL

63 OHIO RIVER PLAZA
GALLIPOLIS, OH 45631

REPAIR/ MAINTENANCE REMODEL

LIGHTING PLAN AND SCHEDULE

E1.0

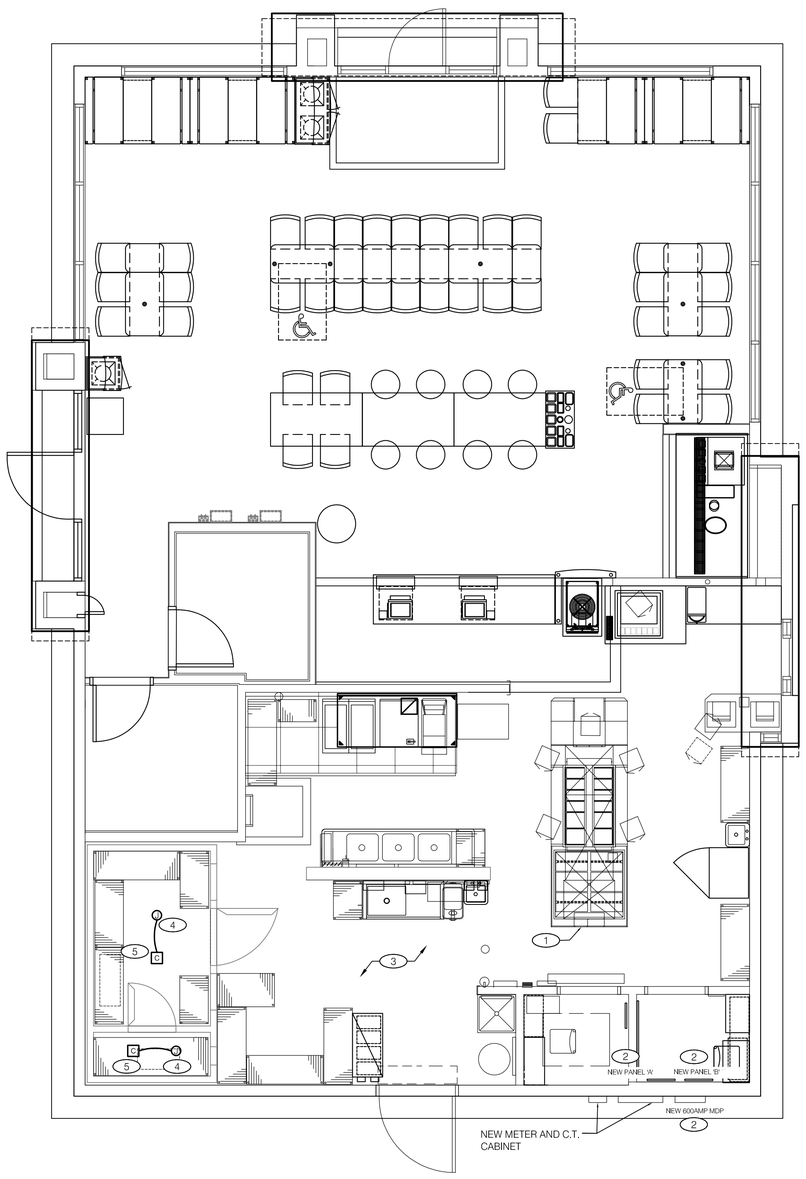

N

ELECTRICAL POWER PLAN 1/4"=1'-0" **A**

A. THE INTENT OF THESE SPECIFICATIONS AND NOTES IS FOR THE CONTRACTOR TO PROVIDE ALL LABOR, MATERIAL, SUPERVISION, AND EQUIPMENT NECESSARY FOR A COMPLETE ELECTRICAL INSTALLATION AS DESCRIBED IN THE DRAWINGS AND SPECIFICATIONS FOR A FULLY OPERATIVE ELECTRICAL SYSTEM.

B. THE ELECTRICAL INSTALLATION OF LIGHT FIXTURES AND OTHER WORK SHALL COMPLY WITH OR EXCEED ALL REQUIREMENTS OF THE LATEST EDITION OF THE NATIONAL ELECTRICAL CODE AND ALL STATE AND LOCAL CODES AND ORDINANCES APPLICABLE TO THIS PROJECT.

C. THE CONTRACTOR SHALL SECURE ALL NECESSARY PERMITS REQUIRED BY LAWS, REGULATIONS, CODES OR ORDINANCES NECESSARY TO FURNISH AND INSTALL ALL WORK INDICATED ON THE PLANS OR HEREIN SPECIFIED.

D. ALL WIRING IN PLENUM SPACES SHALL BE PLENUM RATED PER NEC 300-22.

E. ALL WIRE SHALL BE TYPE THHN/THWN 600V INSULATION RATED FOR 90 DEGREE. #12 THHN/THWN. ALL CONDUCTORS SHALL BE 98% CONDUCTIVITY COPPER. ALL WIRES SHALL BE INSTALLED IN STEEL EMT RACEWAYS.

F. COLOR CODE FEEDERS AND BRANCH CIRCUIT CONDUCTORS AS FOLLOWS:

208Y/120 VOLTS	PHASE
BLACK	A
RED	B
BLUE	C
WHITE	NEUTRAL
GREEN	GROUND
GREEN/YELLOW	ISO. GROUND

G. ALL BOXES AND ENCLOSURES SHALL BE METAL AND NEMA TYPE AS NOTED OR REQUIRED.

H. ALL MOUNTING HEIGHTS PER CODES AND ADA. E.C. SHALL VERIFY THAT ALL LOADS PLACED ON EXISTING PANEL DO NOT EXCEED THE MAXIMUM LOADING REQUIREMENT PER THE LATEST EDITION OF THE NEC. NOTIFY A/E IF OVERLOAD IS POSSIBLE.

I. CONTRACTOR IS RESPONSIBLE FOR LOADING ON ALL PANELS AND FEEDERS PER THE N.E.C. CONTRACTOR SHALL KEEP CIRCUIT CONTINUITY TO DEVICES TO REMAIN. E.C. SHALL VERIFY THAT ALL LOADS PLACED ON EXISTING PANELS AND FEEDERS DO NOT EXCEED THE MAXIMUM LOADING REQUIREMENT PER THE LATEST EDITION OF THE NEC. NOTIFY A/E IF OVERLOAD IS POSSIBLE.

J. AT THE TIME OF THIS PRINTING, THE 12 MONTH MAXIMUM DEMAND LOAD OF THIS BUILDING WAS NOT AVAILABLE. THIS CONTRACTOR SHALL COORDINATE WITH POWER CO. TO DETERMINE MAXIMUM DEMAND, MULTIPLY BY 1.25 AND ADD ADDITIONAL LOAD, PER NEC. INFORM ENGINEER IF ANY POSSIBLE OVERLOADS BEFORE ROUGH-IN.

K. E.C. SHALL VERIFY THAT THE NEW LOADS DO NOT OVERLOAD EXISTING UTILITY SERVICE. THE CONTRACTOR IS ALSO RESPONSIBLE TO CALCULATE AND VERIFY THAT ALL UPSTREAM PANELS AND FEEDERS ARE NOT OVERLOADED DUE TO THE NEW LOADS. CONTRACTOR SHALL NOTIFY ENGINEER OF LOAD CALCULATIONS PRIOR TO COMMENCING WORK.

L. ELECTRICAL CONTRACTOR SHALL VERIFY EXISTING SERVICE, PANELS, AND FEEDERS IN FIELD BEFORE START OF WORK, AND INFORM ENGINEER OF FINDINGS.

M. CONTRACTORS MUST BE LICENSED AND INSURED.

N. CONTRACTORS MUST PROVIDE MINIMUM 1-YEAR WARRANTIES, TO CORRECT ANY/ALL ITEMS IN AS SHORT OF TIME AS POSSIBLE WITHOUT ANY PAYMENTS DUE.

O. CONTRACTOR SHALL PAY ALL PERMITTING FEES, SCHEDULE ALL INSPECTIONS, MAKE ALL CHANGES AS REQUIRED BY LOCAL JURISDICTION IN AS SHORT OF TIME AS POSSIBLE TO OBTAIN OCCUPANCY PERMIT.

ELECTRICAL SPECIFICATIONS **C**

1. PROVIDE NEW ELECTRICAL PANEL FOR DUAL I-LINE PRODUCTION LINE. CONNECT PRODUCTION LINE CIRCUIT BREAKER PANEL VIA UTILITY CHASE IN CEILING TO A 3 POLE, CIRCUIT BREAKER IN PANEL SHOWN. SEE SHEET E2.1. VERIFY ALL REQUIREMENTS WITH ACTUAL EQUIPMENT SPECIFIED. ALL CONNECTION POINTS WILL BE MARKED. THE CONDUIT RUNS WILL BE COILED UP FOR FIELD INSTALLATION. SOME ELECTRICAL COMPONENTS MAY BE REMOVED FOR EASE OF DISASSEMBLING THE LINE-UP. THE ELECTRICAL CONTRACTOR WILL BE FULLY RESPONSIBLE FOR MAKING THE PROPER FIELD CONNECTIONS FROM THE ROUGH-IN LOCATION TO THE MANUFACTURER PROVIDED BREAKER PANEL BOX. IN ADDITION, THE ELECTRICAL CONTRACTOR WILL BE RESPONSIBLE FOR ANY SPLICE POINTS AND/OR JUNCTION BOXES THAT NEED TO BE RECONNECTED. SOME ELECTRICAL COMPONENT ASSEMBLY MAY ALSO BE REQUIRED.
2. NEW EQUIPMENT REPLACING EXISTING EQUIPMENT. REFER TO ONE-LINE DIAGRAM FOR ADDITIONAL INFORMATION.
3. E.C. SHALL REPLACE ALL RECEPTACLES IN BACK OF HOUSE. E.C. SHALL REPLACE ALL WIRE, CONDUIT, ETC. ASSOCIATED WITH RECEPTACLE BACK TO SOURCE. COORDINATE EXACT REQUIREMENTS WITH TACO BELL CONSTRUCTION SUPERVISOR PRIOR TO ANY HOT WORK BEGINNING. ALL RECEPTACLES IN THE KITCHEN AREA MUST COMPLY WITH N.E.C. 2017 210.8(B) GFCI PERSONNEL PROTECTION. E.C. SHALL ENSURE ALL N.E.C. AND LOCAL CODES ARE FOLLOWED.
4. CONNECTION TO CONDENSER ON ROOF.
5. INSTALL CONTROL CABLE FROM FREEZER/COOLER FAN COIL TO ROOF MOUNTED CONDENSER.

KEY NOTES **B**

NOT USED N.T.S. **E**

NOT USED **D**

GPD GROUP®
Glaus, Pyle, Schomer, Burns & DeHaven, Inc.
520 South Main Street, Suite 2531
Akron, OH 44311
330.572.2100 Fax 330.572.2101

CONTRACT DATE:	05.10.21
BUILDING TYPE:	TYPE M
PLAN VERSION:	-
BRAND DESIGNER:	-
SITE NUMBER:	4320
STORE NUMBER:	2021188.16

TACO BELL

63 OHIO RIVER PLAZA
GALLIPOLIS, OH 45631

REPAIR/
MAINTENANCE
REMODEL

ELECTRICAL POWER PLAN

E2.0

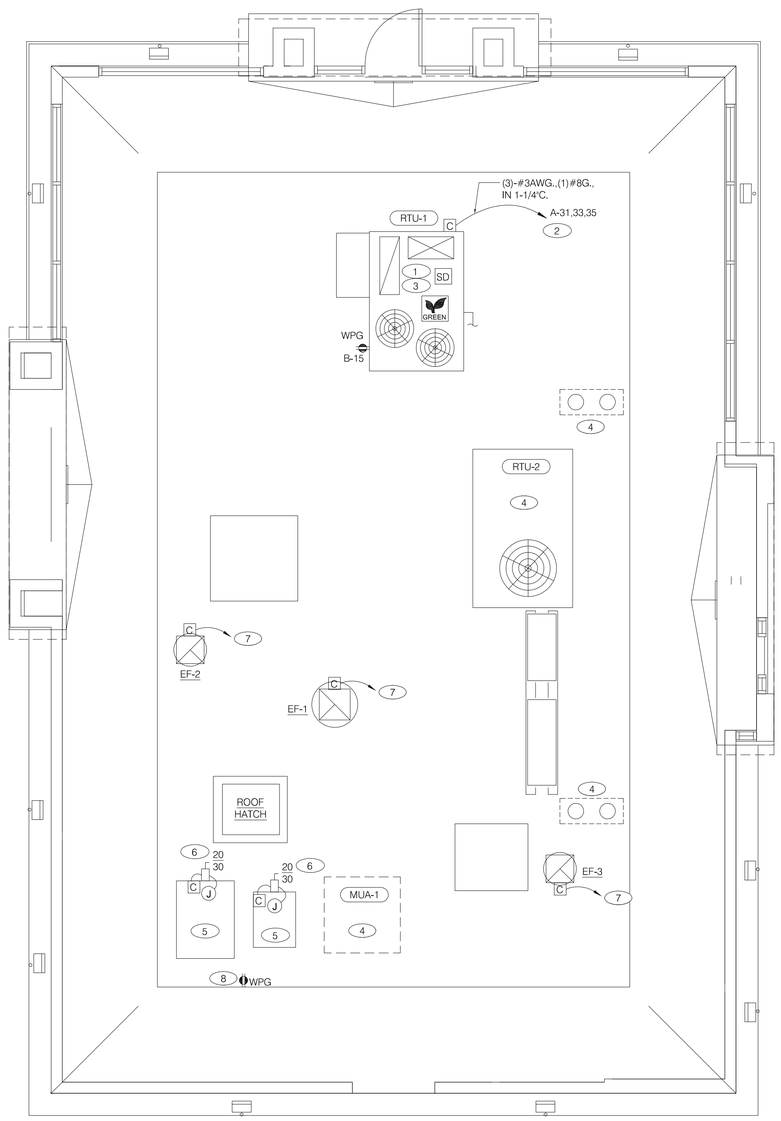

ELECTRICAL ROOF PLAN 1/4"=1'-0" **A**

GENERAL NOTES:

A. NO CONDUITS SHALL BE FASTENED DIRECTLY TO OR THROUGH ROOFING MEMBRANE.

B. ALL CUTS IN ROOFING SHALL BE MINIMAL AND IN ACCORDANCE WITH ROOFING MFR'S AND INSTALLERS REQ'S.

C. REFER TO MECH. DWGS FOR MECHANICAL EQUIPMENT ELECTRICAL REQ'S

D. ALL EXPOSED ELEC. CONDUITS SHALL PENETRATE ROOF MEMBRANE AT PIPE HOODS U.O.N.

E. REFER TO ELEC EQUIPMENT SCHEDULE AND ROUGH IN PLAN

F. ALL CONDUITS TO AND FROM RTU SHALL BE ROUTED INSIDE OF RTU CURB. COORDINATE WITH RTU MFR RECOMMENDATIONS.

G. ALL CONDUITS INSIDE EXHAUST FANS SHALL BE ROUTED INSIDE CURB.

H. ALL WIRING AND CONDUITS SHALL BE CONCEALED. NO CONDUITS SHALL BE PERMITTED TO RUN EXPOSED ACROSS ROOF DECK. ROUTE ALL CONDUITS THROUGH EQUIPMENT ROOF CURBS OR ARCJITECT SPECIFIC ROOF PENETRATIONS.

GENERAL NOTES N.T.S. **D**

1. EXISTING RTU-1 SHALL BE REMOVED. NEW RTU-1 SHALL BE INSTALLED IN SAME LOCATION. REFER TO ELECTRICAL ROOF PLAN FOR NEW WIRE AND CONDUIT INFORMATION. CONTRACTOR TO FIELD VERIFY EXACT LOCATIONS AND REQUIREMENTS. REFER TO MECHANICAL DRAWINGS FOR ADDITIONAL INFORMATION.

2. POWER AND CONTROL IN FLEXIBLE WATERPROOF CONDUIT (LFMC CONDUIT) TO ENTER FROM SIDE OF THE CURB AND UP TO FACTORY PROVIDED DISCONNECT SWITCH. COORDINATE WITH MECHANICAL CONTRACTOR.

3. RTU-1 SHALL BE PROVIDED WITH BUILT-IN DISCONNECT AND SINGLE POINT WIRING. PROVIDE GFCI MAINTENANCE RECEPTACLE FOR UNIT IF NOT PROVIDED BY MANUFACTURER.

4. EXISTING HVAC EQUIPMENT SHALL REMAIN.

5. NEW COOLER/FREEZER CONDENSERS SHALL REPLACE EXISTING CONDENSERS. E.C. SHALL REUSE EXISTING FEEDERS, UNLESS DEEMED UNUSABLE. E.C. SHALL REPAIR OR REPLACE FEEDERS AS NECESSARY FOR A COMPLETE SYSTEM CONNECTION. REFER TO ELECTRICAL PLANS FOR CONTINUATION TO COOLER/FREEZER. REFER TO MECHANICAL PLANS FOR ADDITIONAL INFORMATION.

6. CONTRACTOR SHALL VERIFY CIRCUIT BREAKER TYPE, STARTER, DISCONNECT SWITCH, AND FUSE SIZE (IF REQUIRED) WITH SELECTED EQUIPMENT MANUFACTURER'S SHOP DRAWINGS PRIOR TO PLACING ORDER AND FURNISH AND INSTALL EVERYTHING AS REQUIRED. RECONNECT TO NEW PANEL. REFER TO ONE LINE DIAGRAM FOR ADDITIONAL INFORMATION.

7. NEW EXHAUST FANS SHALL REPLACE EXISTING EXHAUST FANS. E.C. SHALL REUSE EXISTING FEEDERS. UNLESS DEEMED UNUSABLE. E.C. SHALL REPAIR OR REPLACE FEEDERS AS NECESSARY FOR A COMPLETE SYSTEM CONNECTION. REFER TO MECHANICAL PLANS FOR ADDITIONAL INFORMATION.

8. E.C. SHALL INSTALL WEATHER PROOF/GFCI ROOF TOP MAINTENANCE RECEPTACLE NEXT TO EQUIPMENT, IF NONE ARE PRESENT.

KEY NOTES **B**

GPD GROUP®
Glaus, Pyle, Schomer, Burns & DeHaven, Inc.

520 South Main Street, Suite 2531
Akron, OH 44311
330.572.2100 Fax 330.572.2101

CONTRACT DATE:	05.10.21
BUILDING TYPE:	TYPE M
PLAN VERSION:	-
BRAND DESIGNER:	-
SITE NUMBER:	4320
STORE NUMBER:	2021188.16

TACO BELL

63 OHIO RIVER PLAZA
GALLIPOLIS, OH 45631

REPAIR/
MAINTENANCE
REMODEL

ELECTRICAL ROOF PLAN

E2.1

	MDP	MAINS TYPE:	MCB	DISTRIBUTION TYPE:	120/208Y, 3-PH, 4-WIRE
		MAINS RATING (A):	600	RATED FAULT CURRENT:	65 KAIC (VERIFY W/ POWER CO. PRIOR TO ORDERING.)
STATUS:	NEW	BUS RATING (A):	600	RATING TYPE:	FULLY RATED
LOCATION:		ENCLOSURE:	NEMA 3R	SERVICE ENTRANCE RATED:	YES
SUPPLY FROM:	UTILITY TRANSFORMER	MOUNTING:	SURFACE	ISOLATED GND BAR:	NO

CKT #	LOAD L	R	HV	M	K	DESCRIPTION	NOTE	WIRE	BRKR	TOTAL PER PHASE IN KVA A	B	C	BRKR	WIRE	NOTE	DESCRIPTION	LOAD L	R	HV	M	K	CKT #
1			**4.92**			**PANEL 'A'**			**225**	4.92	0.00	0.00	100			SPARE						2
3			**4.92**							0.00	4.92	0.00										4
5			**4.92**							0.00	0.00	4.92										6
7		**0.72**								0.72	0.00	0.00										8
9		**0.18**				**PANEL 'B'**			**225**	0.00	0.18	0.00				SPACE						10
11										0.00	0.00	0.00										12
13										0.00	0.00	0.00										14
15						**(PANEL 'D') DUAL I-LINE**			**200**	0.00	0.00	0.00				SPACE						16
17										0.00	0.00	0.00										18
									TOTAL KVA =	5.64	5.10	4.92										
									TOTAL AMPS =	47.0	42.5	41.0										
									% UNBALANCE =	8%	-2%	-6%										

15.66 **ADD'L CONN KVA**
43.47 **ADD'L CONN AMPS**

	DEMAND FACTOR	A	B	C	ADD'L TOTAL
LIGHTING	1.25	0.00	0.00	0.00	0.00
FIRST 10KVA RECEPTACLES	1.00	0.72	0.18	0.00	0.90
REMAINING RECEPTACLES	0.50	0.00	0.00	0.00	0.00
HVAC EQUIP	1.00	4.92	4.92	4.92	14.76
25% OF LARGEST MOTOR	0.25	0.00	0.00	0.00	0.00
MISCELLANEOUS	1.00	0.00	0.00	0.00	0.00
KITCHEN EQUIPMENT	0.65	0.00	0.00	0.00	0.00
(** KITCHEN LOAD PER 2017 NEC TABLE 220.56)					
ADD'L TOTALS (KVA)		5.64	5.10	4.92	15.66
ADD'L TOTALS (A)		47.00	42.50	41.00	43.47
% UNBALANCE		8%	-2%	-6%	

NOTES

L - Provide circuit breaker w/ lock-on clip
R - Provde circuit breaker w/ red lock-on clip
X - Existing breaker to be reused or replaced (If not in good workiing condition) (Reconect existing load to new panel)
B - Provide new breaker in available space. Match AIC rating of existing breakers.
GP - Provide a GFCI breaker for personnel protection (4-6 mA)
GE - Provde a GFCI breaker for equipment protection (20-40 mA)
H - Provide a HACR rated breaker
C - Indicates circuit is controled through lighting contactor. Refer to lighting control details for more information.
D - Existing Circuit/Breaker to be disconnected/removed.
IG - Isolated Ground

TB-GALLIPOLIS

EXISTING DIST. PANEL 'MDP HAS BEEN DEMOLISHED AND UPGRADED TO THE PANEL CRITERIA SEEN ON THIS SHEET.
CONNECT EXISTING EQUIPMENT AS SHOWN TO THIS NEW DIST. PANEL 'MDP'.

EQUIPMENT IN BOLD TYPE ON PANEL SCHEDULES INDICATES NEW OR UPDATED LOAD.

PANEL NAME:	"B"	MAINS TYPE:	MLO	DISTRIBUTION TYPE:	120/208Y, 3-PH, 4-WIRE
		MAINS RATING (A):	225	RATED FAULT CURRENT:	22 KAIC (VERIFY W/ POWER CO. PRIOR TO ORDERING.)
STATUS:	NEW	BUS RATING (A):	225	RATING TYPE:	FULLY RATED
LOCATION:		ENCLOSURE:	NEMA 1	SERVICE ENTRANCE RATED:	NO
SUPPLY FROM:	MDP	MOUNTING:	RECESSED	ISOLATED GND BAR:	NO

CKT #	LOAD L	R	HV	M	K	DESCRIPTION	NOTE	WIRE	BRKR	TOTAL PER PHASE IN KVA A	B	C	BRKR	WIRE	NOTE	DESCRIPTION	LOAD L	R	HV	M	K	CKT #
1						HOOD LIGHTS	X		20/1	0.00	0.00	0.00	20/1		X	DINING RM. LTS & MENU BAORD						2
3						KITCHEN LIGHTS	X		20/1	0.00	0.00	0.00	20/1		X	FRONT COUTER LIGHTS						4
5						EMS	X		20/1	0.00	0.00	0.00	20/1		X	RECEPT. BACKDOOR						6
7						AWNING LIGHTS	X		20/1	0.00	0.00	0.00	20/1		X	COFFEE OUTLET						8
9						AWNING LIGHTS	X		20/1	0.00	0.00	0.00	20/1		X	COFFEE OUTLET						10
11						AWNING LIGHTS	X		20/1	0.00	0.00	0.00	20/1		X	RECEPT. BREAK ROO.						12
13						MENU BOARD @OUTSIDE	X		20/1	0.00	0.00	0.00	20/1		X	DRIVE DISPENSER						14
15		**0.18**				**RTU MAINTENANCE RECEPTACLE**	**B**		**20/1**	0.00	0.18	0.00	20/1		X	ROOF LIGHTS & OUTLETS						16
17						YARD LIGHTS	X		20/1	0.00	0.00	0.00	20/1		X	WATER HEATER						18
19						YARD LIGHTS	X		20/1	0.72	0.00	0.00	**20/1**		**X**	**SHOW WINDOW RECEPTACLES**		**0.72**				20
21						OCB	X		20/1	0.00	0.00	0.00	20/1		X	LEAVE ON EMERG. LIGHTS						22
23						ROOF LIGHTS	X		20/1	0.00	0.00	0.00	20/1		X	SPARE						24
25						POLE SIGN	X		20/1	0.00	0.00	0.00	20/1		X	EXIT ALARM						26
27						BUILDING SIGNS	X		20/1	0.00	0.00	0.00	20/1		X	NEON LIGHT						28
29						BUILDING SIGNS	X		20/1	0.00	0.00	0.00	20/1		X	LIGHTING WEST SITE						30
31						BUILDING SIGNS	X		20/1	0.00	0.00	0.00	20/1		X	HEATING CABINET						32
33						SPARE	X		30/2	0.00	0.00	0.00	20/1		X	EXISTING EQUIPMENT						34
35										0.00	0.00	0.00	20/1		X	CCTV						36
37						TIME CLOCK	X		20/1	0.00	0.00	0.00	20/2		X	POWER SOAK						38
39						EXISTING EQUIPMENT	X		20/1	0.00	0.00	0.00										40
41						SELF SERVE - PEP. MACH.	X		20/1	0.00	0.00	0.00			X	SPACE						42
									TOTAL KVA =	0.72	0.18	0.00										
									TOTAL AMPS =	6.0	1.5	-										
									% UNBALANCE =	140%	-40%	-100%										

0.90 **ADD'L CONN KVA**
2.50 **ADD'L CONN AMPS**

	DEMAND FACTOR	A	B	C	TOTAL
LIGHTING	1.25	0.00	0.00	0.00	0.00
FIRST 10KVA RECEPTACLES	1.00	0.72	0.18	0.00	0.90
REMAINING RECEPTACLES	0.50	0.00	0.00	0.00	0.00
HVAC EQUIP	1.00	0.00	0.00	0.00	0.00
25% OF LARGEST MOTOR	0.25	0.00	0.00	0.00	0.00
MISCELLANEOUS	1.00	0.00	0.00	0.00	0.00
KITCHEN EQUIPMENT	0.65	0.00	0.00	0.00	0.00
(** KITCHEN LOAD PER 2017 NEC TABLE 220.56)					
ADD'L TOTALS (KVA)		0.72	0.18	0.00	0.90
ADD'L TOTALS (A)		6.00	1.50	0.00	2.50
% UNBALANCE		140%	-40%	-100%	

NOTES

L - Provide circuit breaker w/ lock-on clip
R - Provde circuit breaker w/ red lock-on clip
X - Existing breaker to be reused or replaced (If not in good workiing condition) (Reconect existing load to new panel)
B - Provide new breaker in available space. Match AIC rating of existing breakers.
GP - Provde a GFCI breaker for personnel protection (4-6 mA)
GE - Provde a GFCI breaker for equipment protection (20-40 mA)
H - Provde a HACR rated breaker
C - Indicates circuit is controled through lighting contactor. Refer to lighting control details for more information.
ST - Indicated circuit is controlled via a shunt trip device. Refer to shunt trip details for more information.
IG - Isolated Ground

EXISTING PANEL 'B' HAS BEEN DEMOLISHED AND UPGRADED TO THE PANEL CRITERIA SEEN ON THIS SHEET.
CONNECT EXISTING EQUIPMENT AS SHOWN TO THIS NEW PANEL 'B'.

EQUIPMENT IN BOLD TYPE ON PANEL SCHEDULES INDICATES NEW OR UPDATED LOAD.

PANELBOARD SCHEDULES B

	"A"	MAINS TYPE:	MCB	DISTRIBUTION TYPE:	120/208Y, 3-PH, 4-WIRE
		MAINS RATING (A):	225	RATED FAULT CURRENT:	22 KAIC (VERIFY W/ POWER CO. PRIOR TO ORDERING.)
STATUS:	NEW	BUS RATING (A):	225	RATING TYPE:	FULLY RATED
LOCATION:		ENCLOSURE:	NEMA 1	SERVICE ENTRANCE RATED:	NO
SUPPLY FROM:	MDP	MOUNTING:	RECESSED	ISOLATED GND BAR:	YES

CKT #	LOAD L	R	HV	M	K	DESCRIPTION	NOTE	WIRE	BRKR	TOTAL PER PHASE IN KVA A	B	C	BRKR	WIRE	NOTE	DESCRIPTION	LOAD L	R	HV	M	K	CKT #
1										0.00	0.00	0.00										2
3						WALK IN COOLER	X		20/3	0.00	0.00	0.00	20/3		X	WALK IN FREEZER						4
5										0.00	0.00	0.00										6
7						ICE MACHINE	X		30/2	0.00	0.00	0.00	20/1		X	FANS						8
9										0.00	0.00	0.00	20/2		X	LOBBY ICE MACHINE						10
11						FRYER OUTLET	X		20/1	0.00	0.00	0.00										12
13						CHOPPER & OUTLT. @ ELEC RM	X		20/1	0.00	0.00	0.00	20/1			FRYER						14
15						FREEZER OUTLET	X		20/1	0.00	0.00	0.00	20/1		X	SAFE						16
17						POS ONLY	X	IG	20/1	0.00	0.00	0.00	20/1	IG		POS ONLY						18
19						EXISTING EQUIPMENT	X		20/1	0.00	0.00	0.00										20
21						WI FI	X		20/1	0.00	0.00	0.00	20/3		X	HOOD FAN #1						22
23						PEPSI	X		20/1	0.00	0.00	0.00										24
25						HEATING CAB.	X		20/1	0.00	0.00	0.00										26
27						HEAD LIGHTS & TIMER	X		20/1	0.00	0.00	0.00	20/3		X	HOOD FAN #2						28
29						ICE MACHINE COND.	X		30/1	0.00	0.00	0.00										30
31			**4.92**							4.92	0.00	0.00										32
33			**4.92**			**NEW RTU-1**	**B**		**50/3**	0.00	4.92	0.00	80/3		X	AC UNIT #2						34
35			**4.92**							0.00	0.00	4.92										36
37						RESTROOM DRYER	X		20/1	0.00	0.00	0.00	20/1		X	EXISTING EQUIPMENT						38
39						EXISTING EQUIPMENT	X		20/2	0.00	0.00	0.00	20/1		X	XGFI						40
41										0.00	0.00	0.00	20/1		X	KISOKS						42
									TOTAL KVA =	4.92	4.92	4.92										
									TOTAL AMPS =	41.0	41.0	41.0										
									% UNBALANCE =	0%	0%	0%										

14.76 **TOTAL CONN KVA**
40.97 **TOTAL CONN AMPS**

	DEMAND FACTOR	A	B	C	TOTAL
LIGHTING	1.25	0.00	0.00	0.00	0.00
FIRST 10KVA RECEPTACLES	1.00	0.00	0.00	0.00	0.00
REMAINING RECEPTACLES	0.50	0.00	0.00	0.00	0.00
HVAC EQUIP	1.00	4.92	4.92	4.92	14.76
25% OF LARGEST MOTOR	0.25	0.00	0.00	0.00	0.00
MISCELLANEOUS	1.00	0.00	0.00	0.00	0.00
KITCHEN EQUIPMENT	0.65	0.00	0.00	0.00	0.00
(** KITCHEN LOAD PER 2017 NEC TABLE 220.56)					
TOTALS (KVA)		4.92	4.92	4.92	14.76
TOTALS (A)		41.00	41.00	41.00	40.97
% UNBALANCE		0%	0%	0%	

NOTES

L - Provide circuit breaker w/ lock-on clip
R - Provde circuit breaker w/ red lock-on clip
X - Existing breaker to be reused or replaced (If not in good workiing condition) (Reconect existing load to new panel)
B - Provide new breaker in available space. Match AIC rating of existing breakers.
GP - Provde a GFCI breaker for personnel protection (4-6 mA)
GE - Provde a GFCI breaker for equipment protection (20-40 mA)
H - Provde a HACR rated breaker
C - Indicates circuit is controled through lighting contactor. Refer to lighting control details for more information.
ST - Indicated circuit is controlled via a shunt trip device. Refer to shunt trip details for more information.
IG - Isolated Ground

TB-GALLIPOLIS

EXISTING PANEL 'A' HAS BEEN DEMOLISHED AND UPGRADED TO THE PANEL CRITERIA SEEN ON THIS SHEET.
CONNECT EXISTING EQUIPMENT AS SHOWN TO THIS NEW PANEL 'A'.

EQUIPMENT IN BOLD TYPE ON PANEL SCHEDULES INDICATES NEW OR UPDATED LOAD.

EXISTING ELECTRICAL SERVICE LOAD ANALYSIS

EXISTING HIGH PEAK DEMAND PER POWER COMPANY: **49.16 KW**
(PER 12 CONSECUTIVE MONTHS)

EXISTING SERVICE ENTRANCE - 600AMPS AT 208Y/120V, 3PH, 4W.

49.16 KW **KW X 1.25% =** **61.45 KW**

61.45 KW @ 208Y/120V, 3PH, 4W = **170.69 AMPS**

BASELINE KW FOR CALCULATION = **61.45 KW**

NEW DEMAND LOAD (KW) ADDED :

NEW HVAC	=	**14.76 KW**
NEW KITCHEN	=	**0.00 KW**
NEW LIGHTING	=	**0.00 KW**
NEW RECEPTS.	=	**0.90 KW**
NEW MISC. LOAD	=	**0.00 KW**
TOTAL NEW LOAD ADDED(KW):	=	**15.66 KW**
TOTAL NEW LOAD ADDED(AMPS):	=	**43.50 AMPS**
NEW SERVICE TOTAL DEMAND LOAD (KW) + BASELINE (KW)	=	**77.11 KW**
NEW SERVICE TOTAL DEMAND LOAD (AMPS)	=	**214.19 AMPS**

TACO BELL_GALLIPOLIS, OH 2021188.16 (CALCULATION PER N.E.C. 220.87)

PANELBOARD / LOADING / CIRCUITS

NOT ALL PANEL SCHEDULES ARE SHOWN. NEITHER ENGINEER NOR OWNER IS RESPONSIBLE FOR INFORMATION NOT SHOWN. CONTRACTOR SHALL VERIFY ALL ASPECTS OF ALL EXISTING AND NEW CIRCUITS IN FIELD TO INSURE COMPLIANCE TO ALL APPLICABLE CODES AND THE LOCAL AUTHORITY HAVING JURISDICTION. CONTRACTOR SHALL REMOVE WIRING FROM ALL ITEMS TO BE REMOVED BACK TO PANELS OR SOURCE. CONTRACTOR MAY USE EXISTING CONDUIT SYSTEM WHERE POSSIBLE FOR NEW CIRCUITS TO NEW DEVICES, TERMINATED ON UNUSED EXISTING BREAKERS. CONTRACTOR IS RESPONSIBLE FOR LOADING ON ALL PANELS PER THE N.E.C. CONTRACTOR SHALL KEEP CIRCUIT CONTINUITY TO DEVICES TO REMAIN. E.C. SHALL VERIFY THAT ALL LOADS PLACED ON EXISTING PANELS, FEEDER AND MAINS DO NOT EXCEED THE MAXIMUM LOADING REQUIREMENT PER THE LATEST EDITION OF THE NEC. EC SHALL COORDINATE WITH POWER COMPANY TO OBTAIN 12 MONTH MAX DEMAND, MULTIPLY FINDINGS BY 1.25% AND ADD ADDITIONAL NEW LOAD TO CONFIRM NO OVERLOAD IS POSSIBLE. NOTIFY A/E IF OVERLOAD IS POSSIBLE.

CONTRACTOR SHALL PROVIDE NEW TYPED DIRECTORIES FOR EACH NEW PANEL.

CONTRACTOR SHALL FIELD VERIFY ALL EXISTING CONDITIONS PRIOR TO SUBMITTING FINAL BIDS. CONTRACTOR SHALL CAREFULLY COORDINATE NEW WORK AND DEMOLITION WITH ALL OTHER DISCIPLINES AND EXISTING CONDITIONS.

GENERAL NOTES:

(A) EXISTING SITE LIGHTING, SIGNS, AND DRIVE-THRU EQUIPMENT TO REMAIN. REPLACE ANY WIRING AND CONDUIT THAT IS NOT IN WORKING CONDITION. NEW CIRCUIT BREAKERS SHALL MATCH EXISTING SIZE AND TYPE. CIRCUITS TO BE WIRED THROUGH COMBINED CONTROL BOX CONTACTOR.

NOTE TO CONTRACTORS

ALL CONTRACTORS PRIOR TO BID SUBMISSION PROCESS SHALL VISIT PROPOSED WORK SITE AND FIELD VERIFY ALL EXISTING CONDITIONS. ANY CONDITION THAT DIFFERS FROM THAT SHOWN ON THESE PLANS SHALL BE REPORTED TO THE TENANT'S ARCHITECT/ENGINEER SO THAT NEW AND REVISED BID DRAWINGS OR INFORMATION MAY BE ISSUED. MODIFICATIONS TO THE SCOPE OF WORK WHICH RESULTS FROM THE CONTRACTORS NEGLECT TO VISIT THE SITE PRIOR TO SUBMITTING BID, SHALL BE THE CONTRACTORS SOLE RESPONSIBILITY.

GENERAL NOTES & NOTE TO CONTRACTORS A

GPD GROUP®
Glaus, Pyle, Schomer, Burns & DeHaven, Inc.
520 South Main Street, Suite 2531
Akron, OH 44311
330.572.2100 Fax 330.572.2101

CONTRACT DATE:	05.10.21
BUILDING TYPE:	TYPE M
PLAN VERSION:	-
BRAND DESIGNER:	-
SITE NUMBER:	4320
STORE NUMBER:	2021188.16

TACO BELL

63 OHIO RIVER PLAZA
GALLIPOLIS, OH 45631

REPAIR/
MAINTENANCE
REMODEL

PANEL SCHEDULES AND LOAD SUMMARY

E3.0

LINETYPE LEGEND:

DEMOLISHED

EXISTING TO REMAIN

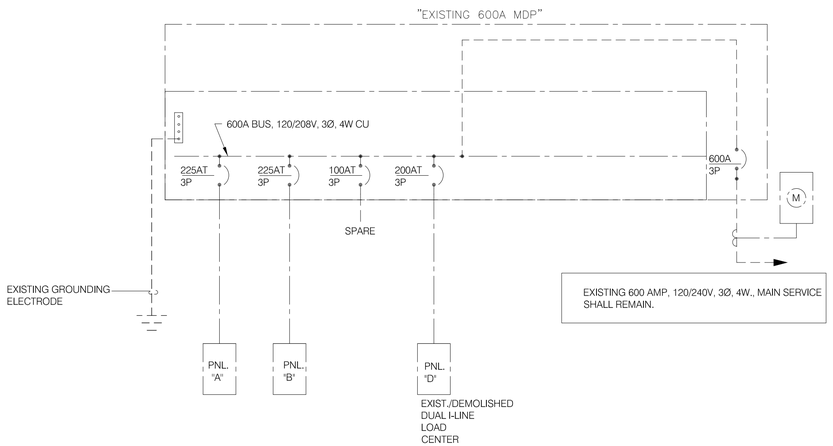

DEMOLISHED/EXISTING ONE LINE DIAGRAM SHOWN FOR REFERENCE ONLY TO SHOW GENERAL ARRANGEMENT OF PANELS. E.C. SHALL FIELD VERIFY ALL FEEDERS AND ARRANGEMENT OF PANELS IN FIELD PRIOR TO ANY HOT WORK BEGINNING. NOTIFY A/E OF ANY DISCREPANCIES THAT WOULD PROHIBIT COMPLETION OF WORK.

DEMOLISHED/EXISTING EQUIPMENT ONE LINE DIAGRAM | B

LINETYPE LEGEND:

NEW

EXISTING TO REMAIN

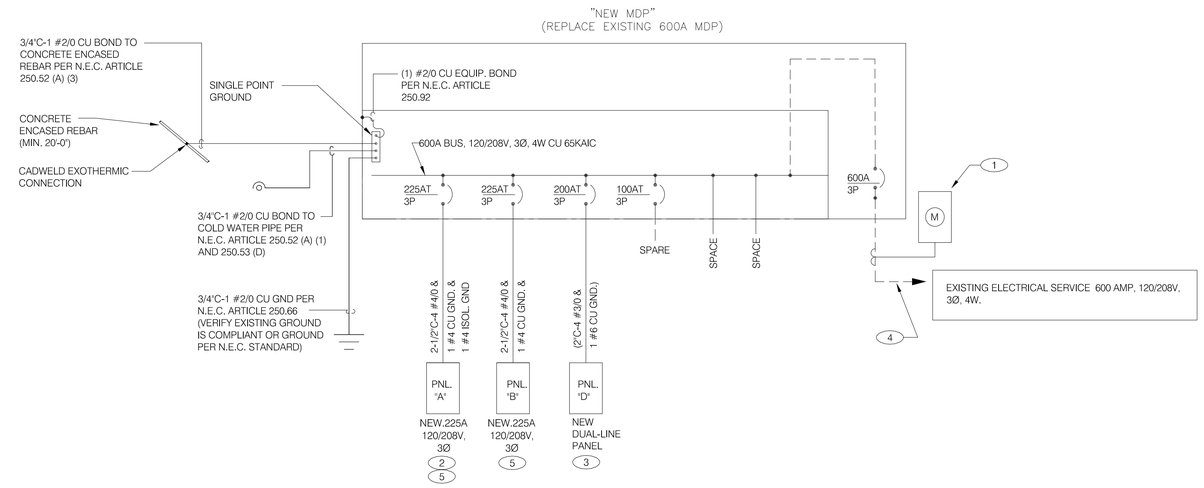

NEW/EXISTING WORK ONE LINE DIAGRAM | A

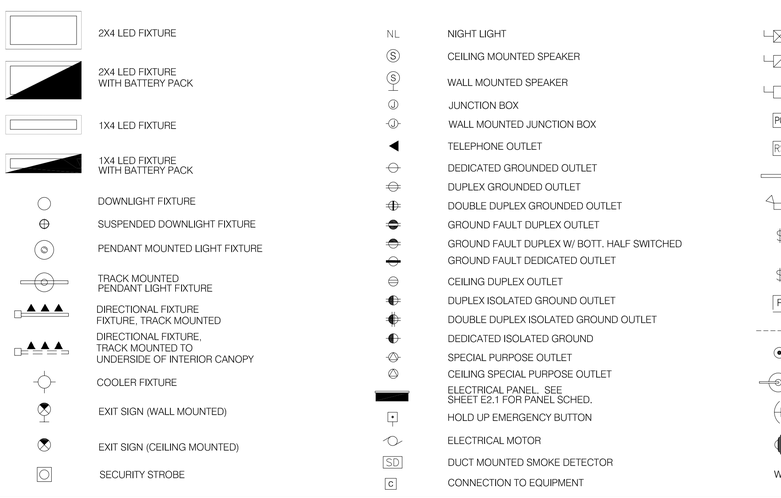

ELECTRICAL LEGEND | F

A. SEE SCOPE OF WORK FOR DETAILS REGARDING OWNER SUPPLIED AND/OR INSTALLED PRODUCTS. GENERAL CONTRACTOR IS RESPONSIBLE FOR ALL OTHER ASPECTS OF THE PROJECT

B. IF UTILITY COMPANY PROPOSES A SERVICE DIFFERENT FROM THAT ILLUSTRATED, CONTACT THE CONSTRUCTION ENGINEER FOR A DECISION BEFORE PROCEEDING. COORDINATE AVAILABLE SHORT CIRCUIT CURRENT W/ LOCAL UTILITY AND PROVIDE CIRCUIT BREAKERS W/ SUFFICIENT INTERRUPTING CAPACITY.

C. ALL WIRING SHOWN SHALL BE COPPER TYPE "THHN/THWN".

D. ARMOR CABLE ACCEPTABLE FOR THE LAST 6'-0" FROM A JUNCTION BOX TO LIGHT FIXTURES. ARMOR CABLE IS NOT ALLOWED FOR NON-ACCESSIBLE FLOORS, WALLS AND CEILINGS.

E. ALL WORK AND MATERIALS SHALL BE AS APPROVED OR REQUIRED BY LOCAL JURISDICTION. IF THERE ANY ITEMS SHOWN ON DRAWINGS NOT COMPLIANT WITH LOCAL JURISDICTION THEN THE CONTRACTOR IS REQUIRED TO PROVIDE THE MORE STRINGENT WORK OR MATERIALS AS REQUIRED. CONTRACTOR IS RESPONSIBLE TO ONLY PROVIDE WORK OR MATERIALS AS APPROVED BY LOCAL GALLIPOLIS JURISDICTION.

F. IN COMPLIANCE WITH THE NEC ARTICLE 110.24, THE E.C. SHALL VERIFY THE AVAILABLE FAULT CURRENT WITH THE POWER Co,. AND PERFORM A FAULT CURRENT CALCULATION . INFORM THE TACO BELL PROJECT MANAGER OF THE FINAL CALCULATED RATINGS SO THAT PROPERLY RATED EQUIPMENT CAN BE ORDERED. E.C. SHALL LABEL EACH PANEL WITH THE AVAILABLE FAULT CURRENT AT THAT PANEL AND PROVIDE NEW LABELS WITH THE DATE THE CALCULATION WAS PERFORMED.

G. CONTRACTOR IS RESPONSIBLE TO CALCULATE DEMAND LOAD ON THE EXISTING PANELS AND SYSTEM AND VERIFY NO OVERLOADS ARE POSSIBLE, CONTACT ENGINEER BEFORE ROUGH-IN IF OVERLOAD IS POSSIBLE.

H. ALL NEW WIRING SHALL BE COPPER.

GENERAL NOTES | D

1. NEW UTILITY METER AND C.T. CABINET. E.C. SHALL COORDINATE WITH UTILITY COMPANY FOR EXACT LOCATION AND REQUIREMENTS.

2. EXISTING AC UNIT #1 SHALL BE REMOVED FROM EXISTING PANEL 'A' AND REPLACED WITH A NEW AC UNIT. CONNECT NEW AC UNIT TO NEW PANEL 'A'. COORDINATE EXACT LOCATION AND REQUIREMENTS WITH HVAC VENDOR AND CONSTRUCTION SUPERVISOR PRIOR TO ANY HOT WORK BEGINNING. REFER TO MECHANICAL DRAWINGS FOR ADDITIONAL INFORMATION. PROVIDE NEW CIRCUIT BREAKER. MATCH EXISTING A.I.C. RATINGS. REFER TO ELECTRICAL ROOF PLAN AND PANEL SCHEDULES FOR MORE INFORMATION.

3. EQUIPMENT CABINET FOR DUAL I-LINE SHALL BE REPLACED. COORDINATE WITH DUAL I-LINE VENDOR FOR ADDITIONAL INFORMATION. E.C. SHALL INSTALL NEW PANEL IN ACCORDANCE WITH MANUFACTURERS SPECIFICATIONS. E.C. SHALL EXAMINE EXISTING WIRE, CONDUIT, ETC. FOR REUSE. REPAIR OR REPLACE AS NECESSARY FOR A COMPLETE CONNECTION.

4. EXISTING ELECTRICAL SERVICE SHALL REMAIN.

5. NEW ELECTRICAL PANEL REPLACING EXISTING/DEMOLISHED PANEL. ALL EXISTING EQUIPMENT FROM DEMOLISHED PANELS SHALL BE RELOCATED/RECONNECTED TO THE NEW PANELS SHOWN ON THIS ONE LINE. E.C. SHALL ENSURE ALL FEEDERS ARE IN WORKING CONDITION. IF NOT, E.C. SHALL REPAIR OR REPLACE ANY AND ALL DAMAGED OR NON WORKING WIRES, CONNECTORS, ETC. E.C. SHALL ENSURE TO INSTALL PANELS AND FEEDERS TO COMPLETE THE SYSTEM. COORDINATE ALL WORK WITH CONSTRUCTION SUPERVISOR AND PANEL VENDOR PRIOR TO ANY HOT WORK BEGINNING.

KEY NOTES | C

GPD GROUP®
Glaus, Pyle, Schomer, Burns & DeHaven, Inc.
520 South Main Street, Suite 2531
Akron, OH 44311
330.572.2100 Fax 330.572.2101

CONTRACT DATE:	05.10.21
BUILDING TYPE:	TYPE M
PLAN VERSION:	-
BRAND DESIGNER:	-
SITE NUMBER:	4320
STORE NUMBER:	2021188.16

TACO BELL

63 OHIO RIVER PLAZA
GALLIPOLIS, OH 45631

REPAIR/ MAINTENANCE REMODEL

RISER DIAGRAMS AND LEGEND

E4.0

EUSERC