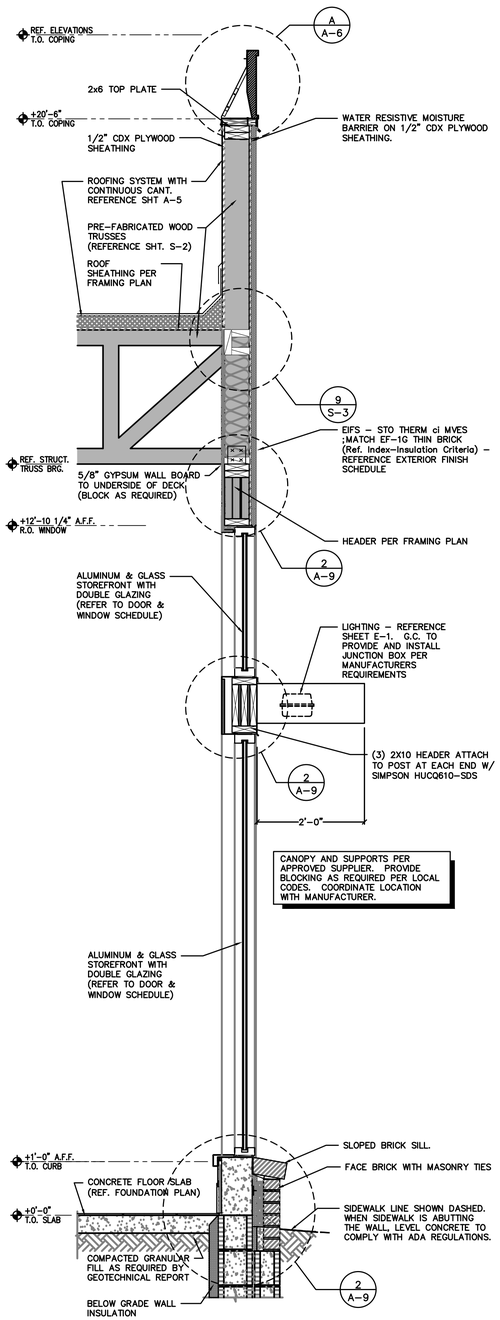

1 **DINING ROOM SIDE WALL**
SCALE: 3/4" = 1'–0"

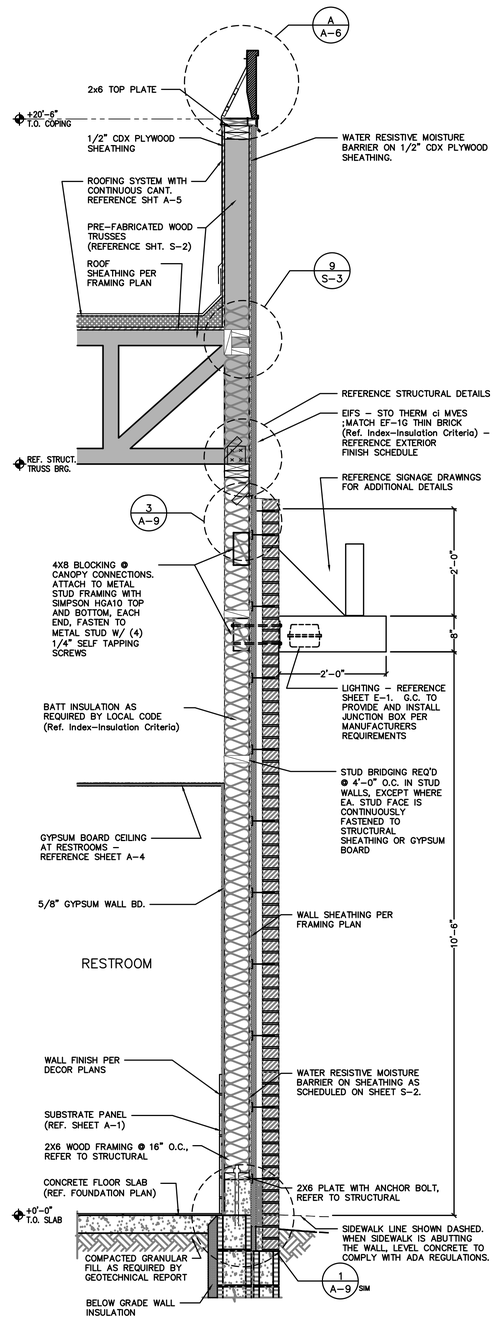

2 **MAIN ENTRANCE WALL**
SCALE: 3/4" = 1'–0"

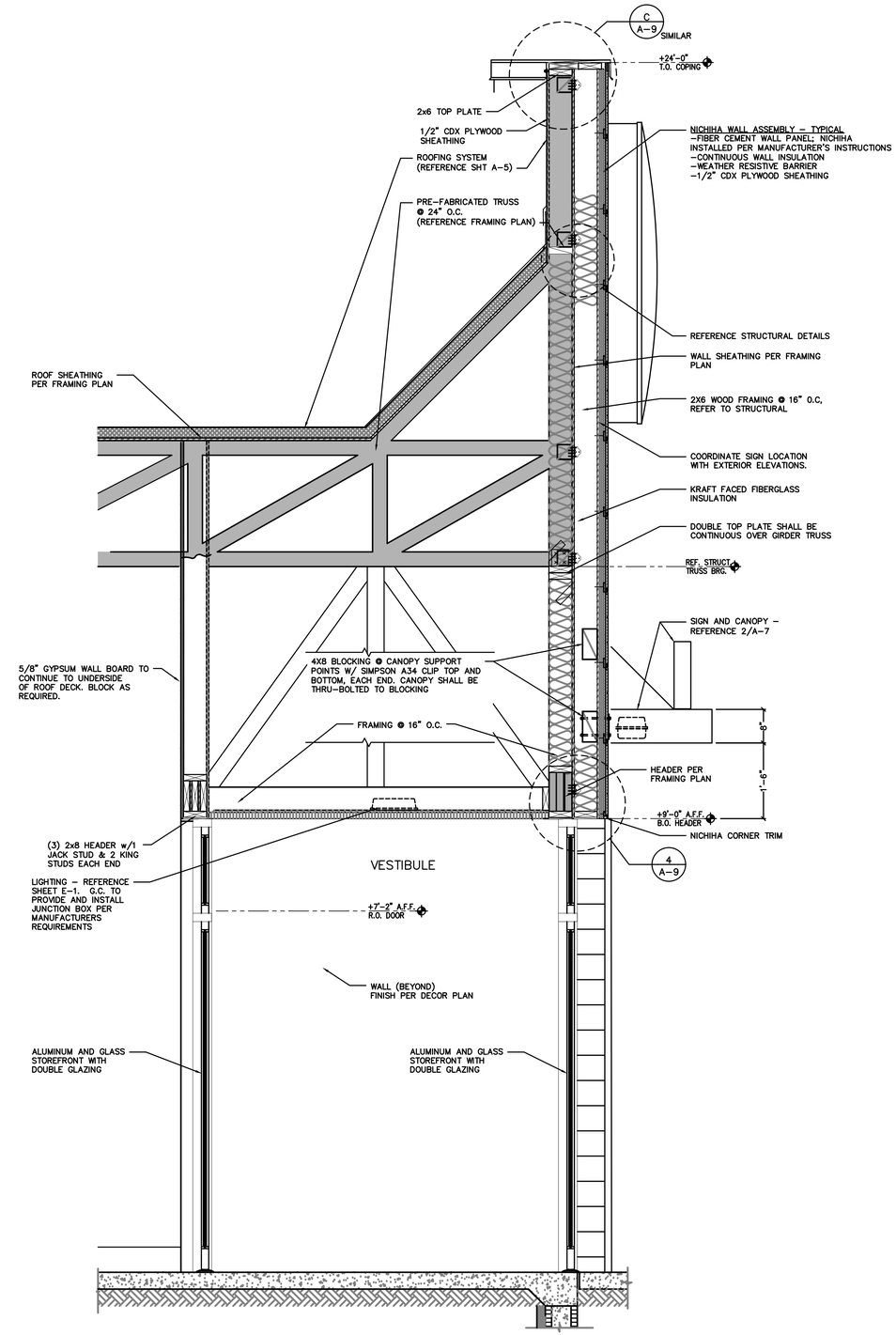

3 **MAIN ENTRANCE TOWER**
SCALE: 3/4" = 1'–0"

Issued:		Date:
A	BKC Approval	10/29/2021
B	Permit Set	1/21/2022
C	Bid Set	1/24/2022
D	Construction Set	3/14/2022
E		

Revisions:		Date:
1		
2		
3		
4		
5		
6		
7		
8		
9		

Seal | Seal

PROJECT ARCHITECT/ENGINEER DATE

PROJECT LEAD DATE

PROJECT DESIGNER DATE

Copyright © 2022
APD Engineering & Architecture, LLC
615 Fishers Run
Victor, NY 14564
585.742.2222
www.apd.com

Drawing Alteration

It is a violation of law for any person, unless acting under the direction of licensed Architect, Professional Engineer, Landscape Architect, or Land Surveyor to alter any item on this document in any way. Any licensee who alters this document is required by law to affix his or her seal and to add the notation "Altered By" followed by his or her signature and the specific description of the alteration or revision.

DO NOT SCALE PLANS

Copying, Printing, Software and other processes required to produce these prints can stretch or shrink the actual paper or layout. Therefore, scaling of this drawing may be inaccurate. Contact APD E&A with any need for additional dimensions or clarifications.

APD ENGINEERING ARCHITECTURE
615 Fishers Run Victor, NY 14564
585.742.2222 - www.apd.com

Ampler Development LLC
4700 Falls of Neuse Rd
Suite 400
Raleigh, NC 27609
phone: (513) 484-0965

Burger King Inc.
Store #
322 Pottstown Ave
Pennsburg, PA 18073
Montgomery County
Project Name & Location:

Wall Sections

Drawing Name:

Date: 11/8/2021

Project No. 21-0327

Type: ROC-2502T

Drawn By: ICP

Scale: As Noted

Drawing No. A-7

PLOTTED: 3/11/2022 3:51 PM m:\2021 jobs\327 - ampler - bk xxxx - pennsburg pa\buildings\cad\drawings\arch